E51（DC）/ E51（AC）Series （Cylindrical Metallized Polypropylene Film Capacitors）

Features

- High voltage range and low inductance capacitors.
- E51 series are made in dry technology.
- Capacitors both for AC/DC application are available.

Specifications

E51（DC）Series（for DC）

Item	Specification
Category temperature range	−25 ～ +70℃（Includes self temperature rise）
Storage temperature	−40 ～ +85℃
Rated voltage (***U***N)	1,300 ～ 50,000Vdc
Terminal (torque)	M8 × 12 (7Nm)
Standards	IEC 61071 : 2007
Dielectric	Polypropylene
Dielectric dissipation factor (tan δ_0)	2×10^{-4}
Capacitance tolerance	±10% (optional ±5%)
Safety devices	−
Impregnant	Solid resin based on vegetable oil, Non PCB
Material of case	Plastic (UL94V-0)
Environmental regulations	Comply with RoHS

E51（AC）Series（for AC）

Item	Specification
Category temperature range	−25 ～ +70℃（Includes self temperature rise）
Storage temperature	−40 ～ +85℃
Rated voltage (***U***N)	2,350 ～ 20,000Vac (3,200 ～ 50,000Vdc)
Terminal (torque)	M8 × 12 (7Nm)
Standards	IEC 61071 : 2007
Dielectric	Polypropylene
Dielectric dissipation factor (tan δ_0)	2×10^{-4}
Capacitance tolerance	±10% (optional ±5%)
Safety devices	−
Impregnant	Solid resin based on vegetable oil, Non PCB
Material of case	Plastic (UL94V-0)
Environmental regulations	Comply with RoHS

Item	Specification
Terminal code	R2
Can material	Plastic (UL94V-0)
Terminal	Axial thread M8×12
	Torque : 7Nm
	I_{max} (terminal) : 100A
Degree of protection	IP00
Humidity class	F
Clearance in air	L + D − 20mm
Creepage distance	L + D − 20mm

Numbering system: e.g. E51, 1,300VDC, 700μF, φ140×175Lmm, R2 terminal

E51 . S 18 - 704 R2 0 / H

- Auxiliary symbol
- Terminal symbol
- Capacitance
- Case length
- Case diameter symbol
- Series name

Dimensions

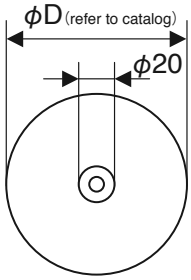

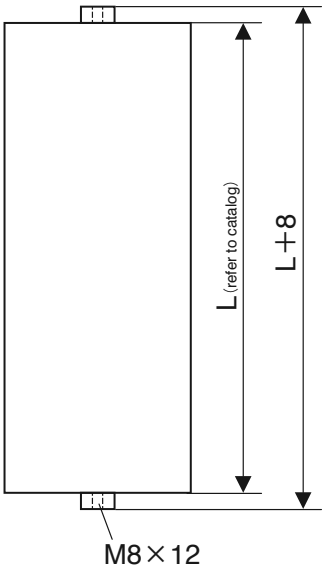

Standard Value and Case Size（E51Series(DC)）

Rated DC Voltage $U_N(DC)$ 〔Vdc〕	Rated Capacitance C_N 〔μF〕	Case size Diameter ϕD 〔mm〕	Case size Length L 〔mm〕	Rated ripple voltage U_r 〔V〕	Surge voltage U_s 〔V〕	Energy Contents W 〔J〕	Series resistance (reference) R_S 〔mΩ〕	Thermal resistance (reference) R_{th} 〔K/W〕	Max current I_{max} 〔Arms〕	Max peak current $\hat{I}$ 〔kA〕	Max surge current I_S 〔kA〕	Self inductance (reference) ESL 〔nH〕	Weight 〔kg〕	Part number
Rated DC voltage U_N (DC)：1,300 ～ 2,700Vdc														
1,300	700	140	175	300	1,950	592	0.39	3	80	9.30	28.00	30	2.8	E51.S18-704R20/H
2,300	80	64	355	400	4,100	212	1.3	3.6	50	4.00	13.00	80	1.2	E51.L35-803R20/H
2,300	170	90	355	400	4,100	450	0.6	2.4	90	6.00	17.00	100	2.4	E51.P35-174R20/H
2,500	25	90	130	800	3,750	78	0.96	6.4	70	3.10	9.30	30	0.9	E51.P13-253R20/H
2,500	50	90	170	800	3,750	156	1.3	4.9	70	3.10	9.30	50	1.1	E51.P17-503R20/H
2,700	40	140	125	500	4,050	146	0.85	2.55	40	5.00	15.00	20	2.0	E51.S12-403R20/H
Rated DC voltage U_N (DC)：3,000 ～ 3,600Vdc														
3,000	18	90	150	600	4,500	81	0.62	5.5	65	2.80	8.40	50	1.1	E51.P15-183R20/H
3,000	80	90	255	700	4,500	360	1.9	3.2	60	3.20	9.60	60	1.7	E51.P25-803R20/H
3,000	350	140	355	600	4,500	1575	1.5	1.5	75	8.40	25.20	100	5.7	E51.S35-354R20/H
3,000	400	140	460	600	4,500	1,800	0.85	1.2	100	15.40	46.20	120	7.4	E51.S46-404R20/H
3,100	86	90	355	500	5,600	413	1.5	2.4	65	4.50	13.00	100	2.4	E51.P35-863R20/H
3,200	15	64	200	700	4,800	77	2.3	5.8	35	1.00	3.00	50	0.7	E51.L20-153R20/H
3,200	33	90	200	700	4,800	169	0.7	4.1	70	2.50	7.50	50	1.3	E51.P20-333R20/H
3,500	500	140	710	600	5,250	3,063	1.2	0.75	100	13.90	41.70	200	11.5	E51.S71-504R20/H
3,600	80	116	245	600	5,400	518	0.71	2.6	90	6.00	18.00	40	2.1	E51.R24-803R20/H
3,600	220	140	300	800	5,400	1426	0.6	1.1	40	4.40	13.20	40	5.0	E51.S30-224R20/H
Rated DC voltage U_N (DC)：4,000 ～ 5,600Vdc														
4,000	8	116	170	2,850	6,000	64	1.40	3.8	25	2.10	6.30	100	1.9	E51.R17-802R20/H
4,000	16	140	170	2,850	6,000	128	1.10	3.1	30	3.80	11.40	100	2.7	E51.S17-163R20/H
4,000	215	140	565	800	6,000	1,720	0.70	0.95	100	11.90	35.70	60	9.0	E51.S56-224R20/H
4,200	8	64	138	800	6,300	71	4.30	8.3	15	0.69	2.07	60	0.5	E51.L14-802R20/H
4,200	45	90	355	800	6,300	397	1.60	2.4	50	4.20	12.60	80	2.4	E51.P35-453R20/H
4,400	8	64	180	950	6,600	77	4.20	6.5	20	0.85	2.55	60	0.6	E51.L18-802R20/H
4,400	8	90	130	950	6,600	77	1.40	6.4	20	1.70	5.10	50	0.9	E51.P13-802R20/H
4,500	300	140	710	850	6,750	3,038	1.10	0.75	100	16.50	49.50	200	11.5	E51.S71-304R20/H
4,700	187.5	140	430	1,000	7,050	2,071	3.20	0.7	50	4.25	12.75	40	7.0	E51.S43-194R20/H
5,000	4.55	64	150	1,000	7,500	57	6.50	7.8	15	0.47	1.41	60	0.5	E51.L15-462R20/H
5,600	1	64	120	1,100	8,400	16	4.60	9.7	20	0.70	2.20	20	1.0	E51.L12-102R20/H
Rated DC voltage U_N (DC)：6,000 ～ 9,300Vdc														
6,000	30	116	200	700	9,000	540	2.3	3.2	30	2.10	6.30	80	2.2	E51.R20-303R20/H
6,200	6.8	64	255	1,200	9,300	131	10	4.6	20	0.60	2.00	50	0.9	E51.L25-682R20/H
6,200	15	90	255	1,200	9,300	288	4.6	3.2	35	1.50	4.50	50	1.7	E51.P25-153R20/H
6,300	20	90	355	1,200	9,450	397	6.8	2.4	25	1.80	8.00	100	2.4	E51.P35-203R20/H
6,300	51.25	140	355	1,200	9,450	1,017	2.7	1.5	40	4.30	20.00	80	5.7	E51.S35-513R20/H
8,000	5	90	220	1,400	12,000	160	1.7	3.76	50	1.80	5.00	80	1.5	E51.P22-502R20/H
8,000	10	90	320	1,400	12,000	320	2.3	2.59	50	1.90	6.00	100	2.2	E51.P32-103R20/H
8,000	40	140	355	1,400	1,2000	1,280	3.5	1.5	40	2.70	8.10	100	5.7	E51.S35-403R20/H
8,500	0.22	64	165	1,400	12,750	8	6.9	7.1	20	0.90	2.90	50	0.6	E51.L16-221R20/H
8,500	0.5	64	165	3,950	12,750	18	3.9	7.1	20	0.54	1.62	60	0.6	E51.L16-501R20/H
8,500	1	90	165	1,400	12,750	36	2.5	5	25	1.70	5.10	50	1.1	E51.P16-102R20/H
9,300	9	90	355	1,500	13,950	389	8	2.3	20	1.00	4.00	100	2.4	E51.P35-902R20/H
9,300	25	140	355	1,500	13,950	1,081	2.7	1.5	40	4.00	11.00	100	5.7	E51.S35-253R20/H
Rated DC voltage U_N (DC)：10,000 ～ 50,000Vdc														
10,000	0.25	64	165	2,000	15,000	13	15.2	7.1	10	1.1	3.3	80	0.6	E51.L16-251R20/H
10,000	4	116	320	2,000	15,000	200	3.5	2	50	1.5	4.5	60	3.5	E51.R32-402R20/H
10,000	4.5	140	480	3,000	15,000	225	1.8	1.1	50	8.8	26.4	100	8.0	E51.S48-452R20/H
10,000	10	90	355	2,500	15,000	500	7	2.3	25	1.3	3.9	100	2.4	E51.P35-103R20/H
12,000	24	140	565	2,100	18,000	1,728	4.2	0.95	25	4.2	12.6	60	9.0	E51.S56-243R20/H
12,500	0.22	64	200	2,100	18,750	17	14	5.8	20	0.5	1.4	80	0.7	E51.L20-221R20/H
12,500	0.25	64	200	2,100	18,750	20	14	5.8	20	0.5	1.5	80	0.7	E51.L20-251R20/H
12,500	1	116	200	2,100	18,750	78	3.6	3.2	35	2	6	80	2.2	E51.R20-102R20/H
13,000	0.25	64	285	3,000	19,500	21	17.7	4.1	10	0.6	1.7	100	1.0	E51.L28-251R20/H
14,000	5	116	355	2,400	21,000	490	3.6	1.8	30	2.5	7.5	100	4.0	E51.R35-502R20/H
14,000	10	140	355	2,400	21,000	980	2.4	1.5	40	4.3	12.9	120	5.7	E51.S35-103R20/H
15,000	1	64	285	3,600	22,500	113	15.1	4.1	15	0.49	1.47	100	1.0	E51.L28-102R20/H
15,000	2	90	285	3,600	22,500	225	7.2	2.9	20	1.1	3.3	200	1.9	E51.P28-202R20/H
15,000	10	140	385	3,600	22,500	1,125	2.7	1.4	40	3.8	11.4	120	6.2	E51.S38-103R20/H
15,000	15	140	460	3,600	22,500	1,688	2.8	1.2	40	4.6	13.8	120	7.4	E51.S46-153R20/H
15,000	20	140	565	3,600	22,500	2,250	3.7	0.94	40	3.8	11.4	120	9.1	E51.S56-203R20/H
20,000	1.25	90	355	4,000	30,000	250	11.7	2.3	20	0.9	2.7	100	2.4	E51.P35-132R20/H
20,000	1.5	90	355	4,000	30,000	300	10.4	2.3	34	1.8	5.4	100	2.4	E51.P35-152R20/H
25,000	10	140	710	4,600	37,500	3125	3.9	0.75	35	4.3	12.9	200	11.5	E51.S71-103R20/H
30,000	1	90	435	4,800	45,000	450	11	1.9	20	1	3	80	2.9	E51.P44-102R20/H
30,000	5	140	710	4,800	45,000	2,250	7	0.75	35	2.8	8.4	200	11.5	E51.S71-502R20/H
35,000	0.2	90	435	5,600	52,500	123	13.4	1.9	20	1	3	80	2.9	E51.P44-201R20/H
35,000	5	140	785	4,800	52,500	3,063	5.5	0.7	25	3.2	9.6	200	12.7	E51.S78-502R20/H
40,000	2.2	140	630	8,700	60,000	1,760	5.3	0.84	35	2.8	8.4	180	10.2	E51.S63-222R20/H
50,000	0.5	140	710	10,000	60,000	625	5.8	0.75	35	2.9	8.7	200	11.5	E51.S71-501R20/H

Standard Value and Case Size（E51series (AC)）

Rated AC Voltage $U_N(AC)$ 〔Vdc〕	Rated DC Voltage $U_N(DC)$ 〔Vdc〕	Rated Capacitance C_N 〔μF〕	Case size Diameter ϕD 〔mm〕	Case size Length L 〔mm〕	Rated ripple voltage U_r 〔V〕	Surge voltage U_s 〔V〕	Energy Contents W 〔J〕	Series resistance (reference) R_S 〔mΩ〕	Thermal resistance (reference) R_{th} 〔K/W〕	Max current I_{max} 〔Arms〕	Max peak current $\hat{I}$ 〔kA〕	Max surge current I_S 〔kA〕	Self inductance (reference) ESL 〔nH〕	Weight 〔kg〕	Part number
Rated AC voltage U_N (AC)：2,000 ～ 3,250Vac　U_{rms}：1,650 ～ 2,300V_{rms}															
2,350	4,500	1.5	64	150	1,650	6,750	15	5.4	7.8	20	0.7	2	20	0.5	E51.L15-152R20/H
2,350	−	3	64	250	1,650	3,525	8.3	3	4.7	15	1.1	3.3	60	1.0	E51.L25-302R20/H
2,500	6,000	1	90	130	1,770	9,000	18	3.2	6.4	28	0.98	2.94	30	0.9	E51.P13-102R20/H
2,550	3,200	1	64	120	1,800	4,800	5	1.8	9.7	40	2	5	40	0.4	E51.L12-102R21/H
2,700	4,400	4	116	110	1,910	6,600	39	0.62	5.8	90	2.2	7	15	1.5	E51.R11-402R20/H
2,900	5,000	3	116	110	2,050	7,500	38	0.74	5.8	80	2	6	15	1.2	E51.R11-302R20/H
3,000	−	0.47	64	100	2,100	6,450	2.1	3.2	11.6	15	1.1	3.3	60	0.3	E51.L10-471R20/H
3,000	−	5	116	260	2,200	7,000	22.5	3.8	2.5	10	2	6	80	2.9	E51.R26-502R20/H
3,250	−	0.75	64	165	2,300	4,875	4.0	4.9	7.1	20	0.9	2.8	100	0.6	E51.L16-751R20/H
3,200	7,280	0.5	64	130	2,260	10,920	13.2	5	9	25	0.62	1.86	60	0.4	E51.L13-501R20/H
Rated AC voltage U_N (AC)：3,500Vac　U_{rms}：2,500V_{rms}															
3,500	6,000	0.22	64	120	2,500	9,000	4.0	4.8	9.7	20	0.7	2.1	60	0.4	E51.L12-221R20/H
3,500	6,000	0.25	64	120	2,500	9,000	4.5	5.4	9.7	15	0.8	2.4	60	0.4	E51.L12-251R20/H
3,500	6,000	0.33	64	120	2,500	9,000	5.9	3	9.7	20	1	2.9	60	0.4	E51.L12-331R20/H
3,500	6,000	0.5	64	120	2,500	9,000	9.0	5.6	9.7	20	1	3	60	0.4	E51.L12-501R20/H
3,200	5,450	0.68	64	120	2,250	9,000	10.1	4.6	9.7	20	1	2.9	60	0.4	E51.L12-681R20/H
3,500	6,000	0.75	90	100	2,500	9,000	13.5	1.6	8.3	40	1.8	5.4	60	0.6	E51.P10-751R20/H
3,500	6,000	1.25	90	130	2,500	9,000	22.5	2.2	6.4	45	1.4	4.2	60	0.9	E51.P13-132R20/H
3,500	6,000	1.5	90	130	2,500	9,000	27.0	2.1	6.4	45	1.5	4.4	60	0.9	E51.P13-152R20/H
2,450	6,000	2	90	140	1,700	9,000	36.0	2.8	5.9	45	1.5	4.4	60	1.0	E51.P14-202R20/H
Rated AC voltage U_N (AC)：3,850 ～ 4,300Vac　U_{rms}：2,700 ～ 3,050V_{rms}															
3,850	−	2.5	90	285	2,700	5,775	18.5	4.1	2.9	25	2	6	100	1.9	E51.P28-252R20/H
4,200	−	1.1	90	150	3,000	6,300	9.7	2.7	5.5	20	1.6	4.8	50	1.0	E51.P15-112R20/H
4,300	−	0.5	64	165	3,050	6,450	4.6	5.3	7.1	15	0.8	2.3	100	0.6	E51.L16-501R21/H
4,300	−	0.8	64	200	3,050	6,450	7.4	7.5	5.8	15	0.9	2.7	100	0.7	E51.L20-801R20/H
Rated AC voltage U_N (AC)：4,550Vac　U_{rms}：3,200V_{rms}															
4,550	7,280	0.22	64	130	3,200	10,920	5.8	8.9	9	15	0.34	1.02	60	0.5	E51.L13-221R20/H
4,550	7,280	0.33	64	130	3,200	10,920	8.7	6.7	9	20	0.46	1.38	60	0.5	E51.L13-331R20/H
3,150	7,280	0.75	90	130	2,200	10,920	19.9	3	6.4	40	1	3	60	0.9	E51.P13-751R20/H
2,500	6,000	1	90	130	1,770	9,000	18.0	3.2	6.4	28	0.98	2.94	30	0.9	E51.P13-102R20/H
4,400	6,800	1.5	90	150	3,100	10,200	34.7	2.3	5.5	25	1	3	50	1.0	E51.P15-152R21/H
4,550	−	1.1	90	275	3,200	6,825	11.4	3.6	3	20	2.4	7.2	80	1.9	E51.P27-112R20/H
2,800	4,400	1.25	90	140	2,000	10,920	12.1	4.5	6.4	40	1.2	3.6	60	1.0	E51.P14-132R20/H
4,550	7,280	1.5	116	130	3,200	10,920	39.7	2	4.9	50	2.1	6.3	60	1.1	E51.R13-152R20/H
4,550	7,280	2	116	130	3,200	10,920	53.0	1.8	4.9	55	2.4	7.2	60	1.1	E51.R13-202R20/H
Rated AC voltage U_N (AC)：4,700 ～ 5,850Vac　U_{rms}：3,300 ～ 4,150V_{rms}															
4,700	−	0.75	64	250	3,300	7,050	8.3	7.5	4.7	15	0.9	2.7	60	1.0	E51.L25-751R20/H
5,000	−	0.47	64	210	3,500	10,750	5.9	5.8	5.5	16	1	3	40	0.8	E51.L21-471R20/H
5,000	10,000	0.5	90	200	3,540	15,000	25.0	5.7	4.1	1	3	50	50	1.3	E51.P20-501R20/H
5,000	−	1	90	255	3,540	7,500	12.5	5.8	3.25	25	1.2	3.6	50	1.7	E51.P25-102R20/H
5,100	−	1.6	116	355	3,600	9,500	20.8	4	1.8	25	5	15	120	3.9	E51.R35-162R20/H
5,100	−	2.4	90	200	3,600	10,965	31.2	3	4.1	35	1.4	4.2	60	1.3	E51.P20-242R21/H
5,100	−	2.6	116	460	3,600	9,500	33.8	3.8	1.4	25	5	15	120	4.9	E51.R46-262R20/H
5,200	−	1.1	90	200	3,700	7,800	14.9	3.1	4.1	20	5.1	3.1	60	1.3	E51.P20-112R20/H
5,850	−	0.47	90	165	4,150	12,580	8.0	3.5	5	20	2.2	6.6	60	1.2	E51.P16-471R20/H
Rated AC voltage U_N (AC)：6,000 ～ 9,620Vac　U_{rms}：4,600 ～ 6,800V_{rms}															
6,300	9,000	0.13	64	165	4,450	13,500	5.3	5.5	7.1	20	0.8	2.4	100	0.6	E51.L16-131R20/H
6,300	9,000	0.14	64	200	4,450	13,500	5.7	17.6	5.8	14	0.3	0.9	50	0.7	E51.L20-141R20/H
6,500	−	4	140	355	4,600	9,500	84.5	1.7	1.5	12	7	21	150	5.7	E51.S35-402R20/H
7,500	−	1.33	140	355	5,300	11,250	37.4	3.9	1.5	10	2.5	7.5	100	5.7	E51.S35-132R20/H
8,900	−	0.24	90	210	6,300	13,350	9.5	5	3.94	20	2	6	60	1.4	E51.P21-241R20/H
9,200	−	0.5	90	275	6,510	13,800	21.2	3.9	3	10	1.7	5.1	80	1.9	E51.P27-501R20/H
9,620	−	0.5	116	250	6,800	14,430	23.1	3	2.6	40	3.7	11.1	60	2.9	E51.R25-501R20/H
Rated AC voltage U_N (AC)：10,000 ～ 35,000Vac　U_{rms}：7,100 ～ 25,000V_{rms}															
10,000	14,000	1	116	390	7,100	15,000	98.0	3.4	1.7	25	3.7	11.1	100	4.0	E51.R39-102R20/H
10,000	14,000	1.9	140	390	7,100	15,000	186.2	2.1	1.4	25	6.2	18.6	100	6.0	E51.S39-192R20/H
12,750	−	0.2	90	355	9,000	27,400	16.3	7	2.3	20	2.3	6.9	100	2.4	E51.P35-201R20/H
10,000	−	0.5	90	355	7,070	15,000	25.0	7.2	1.44	10	1	3	100	2.4	E51.P35-501R20/H
20,000	26,000	0.3	116	355	14,000	30,000	101.4	3.1	1.8	10	8	20	100	3.9	E51.R35-301R20/H
20,000	30,000	1	140	710	14,140	45,000	450.0	5.7	0.7	10	4.9	14.7	200	11.5	E51.S71-102R20/H
20,000	50,000	0.5	140	710	14,140	60,000	625.0	6.2	0.7	10	8.5	20	200	11.5	E51.S71-501R20/H

E53（AC）Series

（AC Cylindrical Metallized Polypropylene Film Capacitors）

Features

- High voltage range and ultra low inductance capacitors.
- E53（AC）series are made in dry technology.
- For AC application.

Specifications

Item	Specification
Category temperature range	−25 ～ +70℃（+85℃ / Includes self temperature rise）
Storage temperature	−40 ～ +85℃
Rated voltage (U_N)	280 ～ 2,450Vac (550 ～ 7,200Vdc)
Terminal (torque)	M6 × 10 (4Nm) / M8 × 10 (7Nm)
Standards	Standards IEC 61071 : 2007
Dielectric	Polypropylene
Dielectric dissipation factor (tan δ_0)	2×10^{-4}
Capacitance tolerance	±10% (optional ±5%)
Safety devices	−
Impregnant	Solid resin based on vegetable oil, Non PCB
Material of case	Plastic (UL94V-0)
Environmental regulations	Comply with RoHS

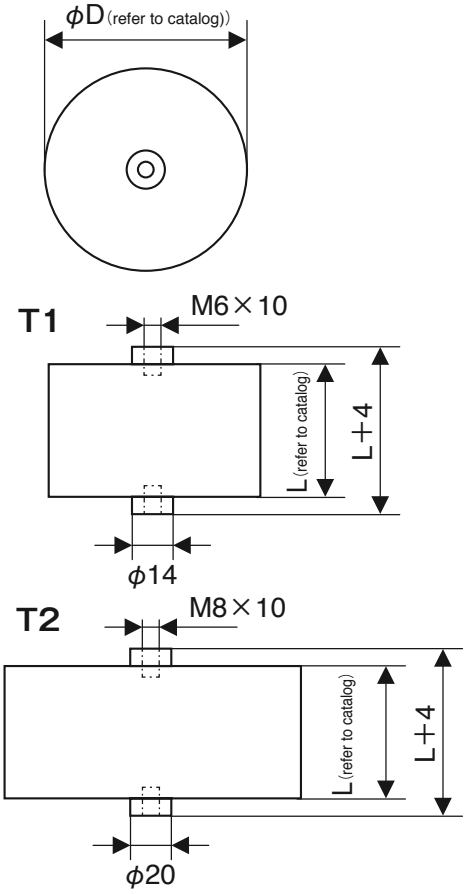

Dimensions

Item		Specification
Terminal code		T1 / T2
Can material		Plastic (UL94V-0)
Terminal	T1	Axial thread M6×10
		Torque : 4Nm
		I_{max} (terminal) : 60A
	T2	Axial thread M8×10
		Torque : 7Nm
		I_{max} (terminal) : 100A
Degree of protection		IP00
Humidity class		G

Numbering system: e.g. E53, 280VAC, 50μF, φ55×56Lmm, T1 terminal

E53 . H 56 - 503 T1 0 / H

- 0 — Auxiliary symbol
- T1 — Terminal symbol
- 503 — Capacitance
- 56 — Case length
- H — Case diameter symbol
- E53 — Series name

Standard Value and Case Size

Rated Capacitance C_N (μF)	Case size Diameter ϕD (mm)	Case size Length L (mm)	Energy Contents W (J)	Series resistance (reference) R_S (mΩ)	Thermal resistance (reference) R_{th} (K/W)	Max current I_{max} (Arms)	Max peak current $\hat{I}$ (kA)	Max surge current I_S (kA)	Self inductance (reference) ESL (nH)	Terminal	Clearance in air L (mm)	Creepage distance K (mm)	Weight (kg)	Part number
Rated voltage U_N : 550Vdc / 280Vac U_{rms} : 200V_{rms} Us : 825V U_{TT} : 825Vdc														
50	55	56	7.6	0.8	8.5	60	0.83	2.5	15	T1	97	97	0.18	E53.H56-503T10/H
100	75	56	15	0.4	6.3	80	1.7	5	15	T2	111	111	0.33	E53.M56-104T20/H
200	95	56	30	0.2	4.9	80	3.3	9.9	15	T2	131	131	0.52	E53.P56-204T20/H
250	105	56	38	0.15	4.5	80	3.3	10	15	T2	141	141	0.64	E53.P56-204T20/H
270	115	56	41	0.15	4.1	100	3.3	10	15	T2	151	151	0.77	E53.R56-274T20/H
380	115	100	57	0.31	2.3	100	3	10	15	T2	195	195	1.37	E53.R10-384T20/H
Rated voltage U_N : 700Vdc / 350Vac U_{rms} : 250V_{rms} Us : 1,050V U_{TT} : 1,050Vdc														
33	55	56	8.1	0.95	8.5	55	0.68	2.1	15	T1	97	97	0.18	E53.H56-333T10/H
68	75	56	17	0.5	6.3	80	1.4	4.2	15	T2	111	111	0.33	E53.M56-683T20/H
120	95	56	29	0.3	4.9	80	2.5	7.4	15	T2	131	131	0.52	E53.P56-124T20/H
150	105	56	37	0.25	4.5	100	3.1	9.3	15	T2	141	141	0.64	E53.Q56-154T20/H
200	115	56	49	0.2	4.1	100	3.1	10	15	T2	151	151	0.77	E53.R56-204T20/H
310	115	100	76	0.3	2.3	100	3	10	15	T2	195	195	1.37	E53.R10-314T20/H
Rated voltage U_N : 900Vdc / 350Vac U_{rms} : 250V_{rms} Us : 1,350V U_{TT} : 1,350Vdc														
30	55	56	12	0.85	8.5	60	0.68	2.1	15	T1	97	97	0.18	E53.H56-303T10/H
60	75	56	24	0.5	6.3	80	1.4	4.1	15	T2	111	111	0.33	E53.M56-603T20/H
100	95	56	41	0.35	4.9	80	2.3	6.8	15	T2	131	131	0.52	E53.P56-104T20/H
120	105	56	49	0.2	4.5	100	2.8	9	15	T2	141	141	0.64	E53.Q56-124T20/H
140	115	56	57	0.2	4.1	100	3.1	10	15	T2	151	151	0.77	E53.R56-144T20/H
265	115	100	107	0.35	2.3	110	3	9	15	T2	195	195	1.37	E53.R10-274T20/H
Rated voltage U_N : 1,100Vdc / 350Vac U_{rms} : 250V_{rms} Us : 1,650V U_{TT} : 1,650Vdc														
12	55	56	7.3	1.7	8.5	40	0.4	1.2	15	T1	97	97	0.18	E53.H56-123T10/H
15	55	56	9.1	1.1	8.5	40	0.5	1.5	15	T1	97	97	0.18	E53.H56-153T10/H
25	75	56	15	0.71	6.3	70	0.83	2.5	15	T2	111	111	0.33	E53.M56-253T20/H
50	95	56	30	0.34	4.9	80	1.7	5	15	T2	131	131	0.52	E53.P56-503T20/H
60	105	56	36	0.35	4.5	100	2.0	6	15	T2	141	141	0.64	E53.Q56-603T20/H
80	115	56	48	0.21	4.1	100	3.0	10	15	T2	151	151	0.77	E53.R56-803T20/H
175	115	100	106	0.41	2.3	100	2.6	8	15	T2	195	195	1.37	E53.R10-184T20/H
Rated voltage U_N : 1,400Vdc / 350Vac U_{rms} : 250V_{rms} Us : 2,100V U_{TT} : 2,100Vdc														
8	55	56	7.8	2	8.5	38	0.33	1	15	T1	97	97	0.18	E53.H56-802T10/H
16	75	56	16	1	6.3	80	0.66	2	15	T2	111	111	0.33	E53.M56-163T20/H
30	95	56	29	0.55	4.9	80	1.2	3.7	15	T2	131	131	0.52	E53.P56-303T20/H
40	105	56	39	0.4	4.5	100	1.7	5	15	T2	141	141	0.64	E53.Q56-403T20/H
50	115	56	49	0.3	4.1	100	2.2	10	15	T2	151	151	0.77	E53.R56-503T20/H
110	115	100	108	0.52	2.3	100	2	6	15	T2	195	195	1.37	E53.R10-114T20/H
Rated voltage U_N : 1,700Vdc / 700Vac U_{rms} : 500V_{rms} Us : 2,550V U_{TT} : 2,550Vdc														
4.7	55	56	6.8	1.3	8.5	45	0.5	1.6	15	T1	97	97	0.18	E53.H56-472T10/H
10	75	56	14	0.6	6.3	80	1.1	3.5	15	T2	111	111	0.33	E53.M56-103T20/H
16	95	56	23	0.37	4.9	80	1.8	5.5	15	T2	131	131	0.52	E53.P56-163T20/H
22	105	56	32	0.27	4.5	100	2.5	7.5	15	T2	141	141	0.64	E53.Q56-223T20/H
33	115	56	48	0.2	4.1	100	3.5	10	15	T2	151	151	0.77	E53.R56-333T20/H
68	115	100	98	0.35	2.3	100	3.1	9.3	15	T2	195	195	1.37	E53.R10-683T20/H
Rated voltage U_N : 2,000Vdc / 700Vac U_{rms} : 500V_{rms} Us : 3,000V U_{TT} : 3,000Vdc														
3.3	55	56	6.6	1.6	8.5	40	0.42	1.2	15	T1	97	97	0.18	E53.H56-332T10/H
8	75	56	16	0.65	6.3	80	1	3	15	T2	111	111	0.33	E53.M56-802T20/H
14	95	56	28	0.35	4.9	80	1.8	5.5	15	T2	131	131	0.52	E53.P56-143T20/H
18	105	56	36	0.3	4.5	100	2.3	7	15	T2	141	141	0.64	E53.Q56-183T20/H
24	115	56	48	0.2	4.1	100	3	10	15	T2	151	151	0.77	E53.R56-243T20/H
52.5	115	100	105	0.39	2.3	100	2.8	8	15	T2	195	195	1.37	E53.R10-533T20/H
Rated voltage U_N : 2,250Vdc / 700Vac U_{rms} : 500V_{rms} Us : 3,375V U_{TT} : 3,375Vdc														
2.5	55	56	6.3	1.8	8.5	40	0.37	1.1	15	T1	97	97	0.18	E53.H56-252T10/H
6	75	56	15	0.76	6.3	70	0.88	2.6	15	T1	111	111	0.33	E53.M56-602T20/H
10	95	56	25	0.46	4.9	80	1.5	4.5	15	T2	131	131	0.52	E53.P56-103T20/H
15	105	56	38	0.27	4.5	100	2.1	6.2	15	T2	141	141	0.64	E53.Q56-153T20/H
18	115	56	46	0.25	4.1	100	2.6	10	15	T2	151	151	0.77	E53.R56-183T20/H
40	115	100	101	0.45	2.3	100	2.4	7	15	T2	195	195	1.37	E53.R10-403T20/H
Rated voltage U_N : 2,800Vdc / 700Vac U_{rms} : 500V_{rms} Us : 4,200V U_{TT} : 4,200Vdc														
1.5	55	56	5.9	2.4	8.5	32	0.27	1.35	15	T1	97	97	0.18	E53.H56-152T10/H
3.3	75	56	13	1.1	6.3	60	0.6	3	15	T2	111	111	0.33	E53.M56-332T20/H
7.5	95	56	29	0.5	4.9	80	1.5	7.5	15	T2	131	131	0.52	E53.P56-752T20/H
10	105	56	39	0.4	4.5	100	1.8	9	15	T2	141	141	0.64	E53.Q56-103T20/H
12	115	56	47	0.3	4.1	100	2.2	12	15	T2	151	151	0.77	E53.R56-123T20/H
25	115	100	98	0.57	2.3	100	1.9	6	15	T2	195	195	1.37	E53.R10-253T20/H
Rated voltage U_N : 3,200Vdc / 1,050Vac U_{rms} : 750V_{rms} Us : 4,800V U_{TT} : 4,800Vdc														
1	55	56	5.1	1.6	8.5	40	0.35	1.75	15	T1	97	97	0.18	E53.H56-102T10/H
2.5	75	56	13	0.65	6.3	75	0.9	4.5	15	T2	111	111	0.33	E53.M56-252T20/H
4	95	56	20	0.4	4.9	80	1.5	7.5	15	T2	131	131	0.52	E53.P56-402T20/H
6	105	56	31	0.28	4.5	100	2.2	11	15	T2	141	141	0.64	E53.Q56-602T20/H
7	115	56	36	0.25	4.1	100	3	12	15	T2	151	151	0.77	E53.R56-702T20/H

Standard Value and Case Size

Rated Capacitance C_N [μF]	Case size Diameter ϕD [mm]	Case size Length L [mm]	Energy Contents W [J]	Series resistance (reference) R_S [mΩ]	Thermal resistance (reference) R_{th} [K/W]	Max current I_{max} [Arms]	Max peak current $\hat{I}$ [kA]	Max surge current I_S [kA]	Self inductance (reference) ESL [nH]	Terminal	Clearance in air L [mm]	Creepage distance K [mm]	Weight [kg]	Part number
Rated voltage U_N : 2,450Vdc / 1,400Vac U_{rms} : 1,000V_{rms} Us : 3,675V U_{TT} : 3,675Vdc														
1.16	55	56	3.5	1.2	8.5	20	0.7	2.2	15	T1	97	97	0.18	E53.H56-122T10/H
2.4	75	56	7.2	0.56	6.3	60	1.5	5	15	T2	111	111	0.33	E53.M56-242T20/H
4.2	95	56	13	0.32	4.9	80	2.6	8	15	T2	131	131	0.52	E53.P56-422T20/H
5.2	105	56	16	0.26	4.5	100	3	10	15	T2	141	141	0.64	E53.Q56-522T20/H
6.4	115	56	19	0.21	4.1	100	4	12	15	T2	151	151	0.77	E53.R56-642T20/H
Rated voltage U_N : 3,600Vdc / 1,400Vac U_{rms} : 1,000V_{rms} Us : 5,400V U_{TT} : 5,400Vdc														
8	115	100	52	0.52	2.3	100	2.3	6.9	15	T2	195	195	1.37	E53.R10-802T20/H
10	115	100	65	0.94	2.3	100	2.5	7.5	15	T2	195	195	1.37	E53.R10-103T20/H
Rated voltage U_N : 3,750Vdc / 2,100Vac U_{rms} : 1,500V_{rms} Us : 5,625V U_{TT} : 5,625Vdc														
0.47	55	56	3.3	2.9	8.5	20	0.7	2.1	15	T1	97	97	0.18	E53.H56-471T10/H
1.1	75	56	7.7	1.2	6.3	60	1.6	5	15	T2	111	111	0.33	E53.M56-112T20/H
1.7	95	56	12	0.8	4.9	80	2.5	8	15	T2	131	131	0.52	E53.P56-172T20/H
2.15	105	56	15	0.64	4.5	100	3	10	15	T2	141	141	0.64	E53.Q56-222T20/H
2.7	115	56	19	0.51	4.1	100	4	12	15	T2	151	151	0.77	E53.R56-272T20/H
Rated voltage U_N : 5,000Vdc / 2,100Vac U_{rms} : 1,500V_{rms} Us : 7,500V U_{TT} : 7,500Vdc														
3	115	100	38	1.2	2.3	125	2.1	6.3	15	T2	195	195	1.37	E53.R10-302T21/H
4	115	100	50	1	2.3	125	2.5	7.5	15	T2	195	195	1.37	E53.R10-402T21/H
Rated voltage U_N : 5,600Vdc / 2,450Vac U_{rms} : 1,750V_{rms} Us : 8,400V U_{TT} : 8,400Vdc														
0.22	55	97	3.4	13.7	4.9	25	0.2	0.7	15	T1	138	138	0.31	E53.H97-221T10/H
0.25	55	97	3.9	12.1	4.9	25	0.3	0.8	15	T1	138	138	0.32	E53.H97-251T10/H
0.5	55	97	7.8	8	4.9	25	0.4	1.3	15	T1	138	138	0.33	E53.H97-501T10/H
Rated voltage U_N : 7,200Vdc / 2,450Vac U_{rms} : 1,750V_{rms} Us : 10,800V U_{TT} : 10,800Vdc														
0.22	55	97	5.7	13.7	4.9	25	0.2	0.7	15	T1	138	138	0.31	E53.H97-221T11/H
0.25	55	97	6.5	12.1	4.9	25	0.3	0.8	15	T1	138	138	0.32	E53.H97-251T11/H

UPGRADE!

E53H（DC） Series

（DC Cylindrical Metallized Polypropylene Film Capacitors）

Features

- High voltage range and ultra low inductance capacitors.
- E53H（DC） series are made in dry technology.
- Robust studs with M8 thread allows for radial connection.

Specifications

Item	Specification
Category temperature range	−25 ～+70℃（+85℃ / Includes self temperature rise）
Storage temperature	−40 ～+85℃
Rated voltage (U_N)	600 ～ 2,200Vdc
Terminal (torque)	M8 × 20 (4Nm)
Standards	IEC 61071 : 2007
Dielectric	Polypropylene
Dielectric dissipation factor (tan δ_0)	2×10^{-4}
Capacitance tolerance	±10% (optional ±5%)
Safety devices	−
Impregnant	Solid resin based on vegetable oil, Non PCB
Material of case	Plastic (UL94V-0)
Environmental regulations	Comply with RoHS

Dimensions

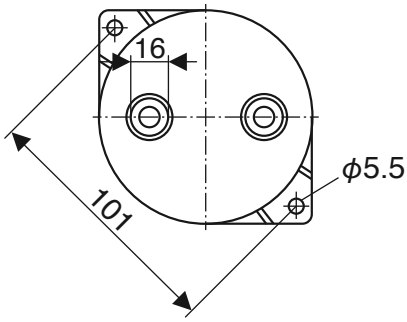

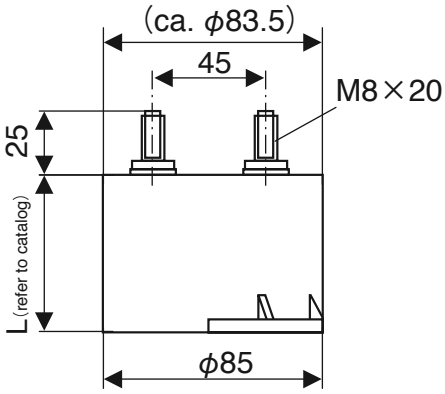

Item	Specification
Terminal code	H1
Can material	Plastic (UL94V-0)
Terminal	Radial thread M8×20
	Torque : 4Nm
	I_{max} (terminal) : 100A
Degree of protection	IP00
Humidity class	F

Numbering system: e.g. E53H, 600VDC, 200μF, ϕ85×51Lmm, H1 terminal

E53 . N 51 - 204 H1 1 / H

- 1 — Auxiliary symbol
- H1 — Terminal symbol
- 204 — Capacitance
- 51 — Case length
- N — Case diameter symbol
- E53 — Series name

Standard Value and Case Size

Rated Capacitance C_N 〔μF〕	Case size Diameter ϕD_1 〔mm〕	Case size Length L_1 〔mm〕	Rated ripple voltage U_r 〔V〕	Energy Contents W 〔J〕	Series resistance (reference) R_S 〔mΩ〕	Thermal resistance (reference) R_{th} 〔K/W〕	Max current I_{max} 〔Arms〕	Max peak current $\hat{I}$ 〔kA〕	Max surge current I_S 〔kA〕	Self inductance (reference) ESL 〔nH〕	Clearance in air L 〔mm〕	Creepage distance K 〔mm〕	Weight 〔kg〕	Part number
Rated voltage U_N : 600Vdc Us : 900V U_{TT} : 900Vdc														
200	85	51	100	36	0.75	6.1	60	3.3	9.9	30	29	33	0.36	E53.N51-204H11/H
280	85	64	100	50	0.84	4.8	60	3.5	10.5	35	29	33	0.45	E53.N64-284H10/H
400	85	76	100	72	1.1	4.1	60	3.3	9.9	40	29	29	0.53	E53.N76-404H11/H
Rated voltage U_N : 700Vdc Us : 1,050V U_{TT} : 1,050Vdc														
150	85	51	160	37	0.7	6.1	60	2.9	8.7	30	29	33	0.36	E53.N51-154H11/H
200	85	64	160	49	0.92	4.8	60	2.9	8.7	35	29	33	0.45	E53.N64-204H10/H
300	85	76	160	74	1.2	4.1	60	2.9	8.7	40	29	29	0.53	E53.N76-304H11/H
Rated voltage U_N : 900Vdc Us : 1,350V U_{TT} : 1,350Vdc														
120	85	51	200	49	0.84	6.1	60	2.6	7.9	30	29	33	0.36	E53.N51-124H11/H
150	85	64	200	61	1	4.8	60	2.5	7.5	35	29	33	0.45	E53.N64-154H11/H
240	85	76	200	97	1.3	4.1	60	2.6	7.8	40	29	29	0.53	E53.N76-244H11/H
Rated voltage U_N : 1,100Vdc Us : 1,650V U_{TT} : 1,650Vdc														
75	85	51	250	45	1.0	6.1	60	2.0	6	30	29	33	0.36	E53.N51-753H11/H
100	85	64	250	61	0.9	4.8	60	2.0	6.2	35	29	33	0.45	E53.N64-104H10/H
150	85	76	250	91	1.5	4.1	75	2.0	6.1	40	29	29	0.53	E53.N76-154H11/H
Rated voltage U_N : 1,300Vdc Us : 1,950V U_{TT} : 1,950Vdc														
50	85	51	300	42	1.1	6.1	70	1.6	4.8	30	29	33	0.36	E53.N51-503H11/H
68	85	64	300	57	1.3	4.8	70	1.7	5.1	35	29	33	0.45	E53.N64-683H10/H
100	85	76	300	85	1.5	4.1	60	1.6	4.8	40	29	29	0.53	E53.N76-104H11/H
Rated voltage U_N : 1,500Vdc Us : 2,250V U_{TT} : 2,250Vdc														
37.5	85	51	300	42	1.2	6.1	60	1.4	4	30	29	33	0.36	E53.N51-383H11/H
50	85	64	300	56	1.5	4.8	60	1.4	4.2	35	29	33	0.45	E53.N64-503H10/H
75	85	76	300	84	2	4.1	60	1.4	4.2	40	29	29	0.53	E53.N76-753H11/H
Rated voltage U_N : 1,800Vdc Us : 2,700V U_{TT} : 2,700Vdc														
30	85	51	400	49	0.73	6.1	60	1.3	3.9	30	29	33	0.36	E53.N51-303H11/H
40	85	64	400	65	1.6	4.8	60	1.3	3.9	35	29	33	0.45	E53.N64-403H10/H
60	85	76	400	97	2.1	4.1	50	1.3	3.9	40	29	29	0.53	E53.N76-603H11/H
Rated voltage U_N : 2,000Vdc Us : 3,000V U_{TT} : 3,000Vdc														
13	85	51	400	26	1.6	6.1	55	0.64	1.92	30	29	33	0.36	E53.N51-133H10/H
30	85	64	400	60	1.3	4.8	55	1.1	3.3	35	29	33	0.45	E53.N64-303H10/H
43	85	76	400	86	1.8	4.1	50	1	3	40	29	29	0.53	E53.N76-433H10/H
Rated voltage U_N : 2,200Vdc Us : 3,300V U_{TT} : 3,300Vdc														
24.5	85	64	600	59	1.4	4.8	55	0.99	2.97	35	29	33	0.45	E53.N64-253H10/H
35	85	76	600	85	1.9	4.1	50	0.94	2.82	40	29	29	0.53	E53.N76-353H10/H

E55（DC） Series （DC Cylindrical Metallized Polypropylene Film Capacitors）

Features

- High voltage range and ultra low inductance capacitors.
- E55 series are made in dry technology.
- For DC application.

Specifications

Item	Specification
Category temperature range	−25 ～+70℃（+85℃ / Includes self temperature rise）
Storage temperature	−40～+85℃
Rated voltage (U_N)	900 ～ 5,000Vdc
Terminal (torque)	M6×10 (4Nm) / M8×10 (7Nm)
Standards	IEC 61071 : 2007
Dielectric	Polypropylene
Dielectric dissipation factor (tan δ_0)	2×10^{-4}
Capacitance tolerance	±10% (optional ±5%)
Safety devices	−
Impregnant	Solid resin based on vegetable oil, Non PCB
Material of case	Plastic (UL94V-0)
Environmental regulations	Comply with RoHS

Dimensions

Item		Specification
Terminal code		T1 / T2
Can material		Plastic (UL94V-0)
Terminal	T1	Axial thread M6×10
		Torque : 4Nm
		I_{max} (terminal) : 60A
	T2	Axial thread M8×10
		Torque : 7Nm
		I_{max} (terminal) : 100A
Degree of protection		IP00
Humidity class		G

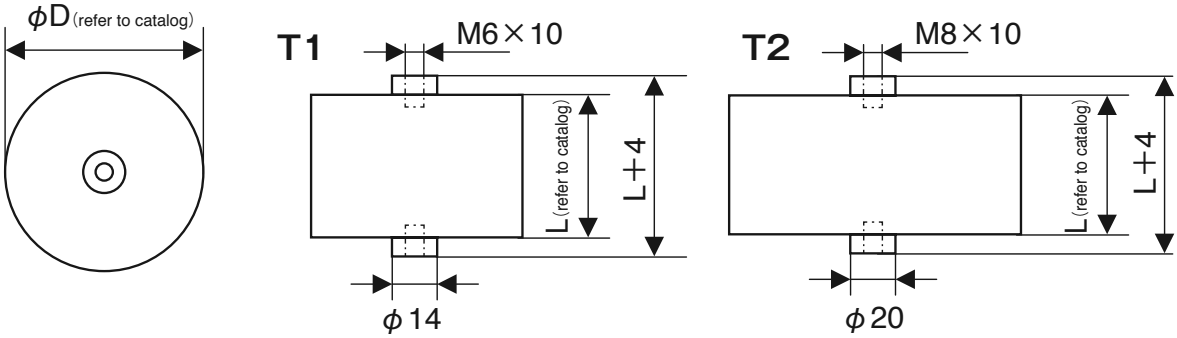

Numbering system: e.g. E55, 900VDC, 47μF, φ55×56Lmm, T1 terminal

E55 . H 56 - 473 T1 0 / H

- Auxiliary symbol
- Terminal symbol
- Capacitance
- Case length
- Case diameter symbol
- Series name

Standard Value and Case Size

Rated Capacitance C_N 〔μF〕	Case size Diameter ϕD 〔mm〕	Case size Length L 〔mm〕	Rated ripple voltage U_r 〔V〕	Energy Contents W 〔J〕	Series resistance (reference) R_S 〔mΩ〕	Thermal resistance (reference) R_{th} 〔K/W〕	Max current I_{max} 〔Arms〕	Max peak current $\hat{I}$ 〔kA〕	Max surge current I_S 〔kA〕	Self inductance (reference) ESL 〔nH〕	Terminal	Clearance in air L 〔mm〕	Creepage distance K 〔mm〕	Weight 〔kg〕	Part number
Rated voltage U_N : 900Vdc Us : 1,350V U_{TT} : 1,350Vdc															
47	55	56	200	19	0.58	8.5	45	0.8	2.3	15	T1	97	97	0.18	E55.H56-473T10/H
250	105	56	280	101	0.35	4.5	100	8.3	24.9	15	T2	141	141	0.64	E55.Q56-254T20/H
Rated voltage U_N : 1,300Vdc Us : 1,950V U_{TT} : 1,950Vdc															
50	75	56	400	42	0.98	6.3	65	2.4	7.2	15	T2	111	111	0.33	E55.M56-503T20/H
90	95	56	400	76	0.55	4.9	80	4.3	12.9	15	T2	131	131	0.52	E55.P56-903T20/H
Rated voltage U_N : 1,800Vdc Us : 2,700V U_{TT} : 2,700Vdc															
22	75	56	600	36	1.5	6.3	40	1.6	4.8	15	T2	111	111	0.33	E55.M56-223T20/H
80	115	56	600	130	0.45	4.1	100	5.2	15.6	15	T2	151	151	0.77	E55.R56-803T20/H
Rated voltage U_N : 2,000Vdc Us : 3,000V U_{TT} : 3,000Vdc															
50	115	56	650	100	0.55	4.1	100	4.1	12.3	15	T2	151	151	0.77	E55.R56-803T20/H
Rated voltage U_N : 2,400Vdc Us : 3,600V U_{TT} : 3,600Vdc															
30	115	56	700	86	0.34	4.1	100	3	10	15	T2	151	151	0.77	E55.R56-303T20/H
Rated voltage U_N : 2,800Vdc Us : 4,200V U_{TT} : 4,200Vdc															
18	105	56	800	71	0.6	4.5	90	4.5	13.5	15	T2	141	141	0.64	E55.Q56-183T20/H
Rated voltage U_N : 3,200Vdc Us : 4,800V UTT : 4,800Vdc															
10	115	56	1,000	51	0.71	4.1	100	2.8	8.4	15	T2	151	151	0.77	E55.R56-103T20/H
Rated voltage U_N : 5,000Vdc Us : 7,500V U_{TT} : 7,500Vdc															
10	115	100	1,500	125	1.3	2.3	100	1.9	1.6	15	T2	195	195	1.37	E55.R10-103T20/H

E59 Series （Custom Designed AC/DC Capacitors in Rectangular Case）

Features

- Custom designed AC/DC capacitor in rectangular case.
- An irreversible pressure switch can be used for external monitoring of the internal pressure.（optional）

Specifications

Item	Specification
Category temperature range	−55 ～＋70℃（＋85℃ / Includes self temperature rise）
Storage temperature	−55 ～＋85℃
Rated voltage (U_N)	500 ～ 25,000V DC/200 ～ 17,000V AC
Standards	IEC 61071 : 2007
Dielectric	Polypropylene
Dielectric dissipation factor (tan δ_0)	2×10^{-4}
Capacitance tolerance	±10% (optional ±5%)
Safety devices	Optional pressure switch for external monitoring of the internal pressure (hermetical construction only)
Impregnant	Solid polyurethane
Material of case	Aluminum or Stainless steel
Environmental regulations	Comply with RoHS

Volume by liters per capacitance and rated voltage

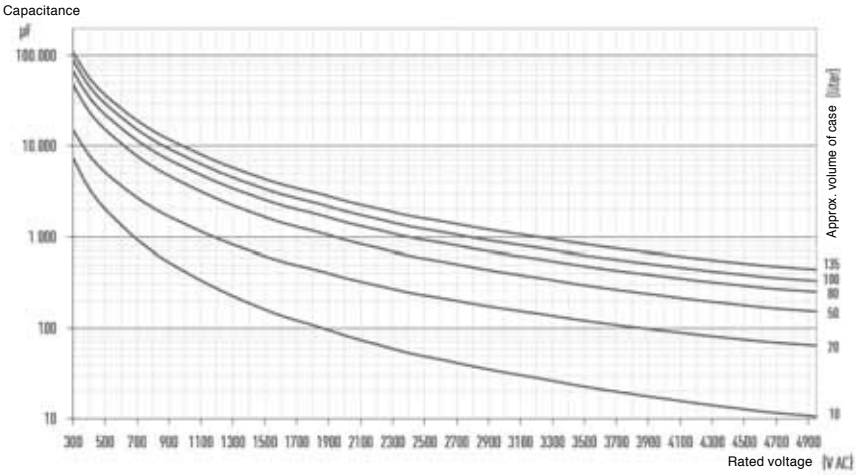

AC capacitor volume by liters

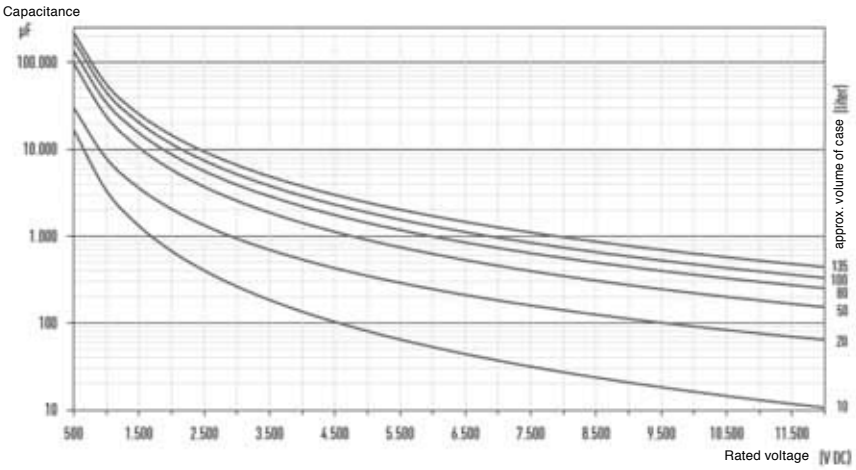

DC capacitor volume by liters

Standard fixing brackets

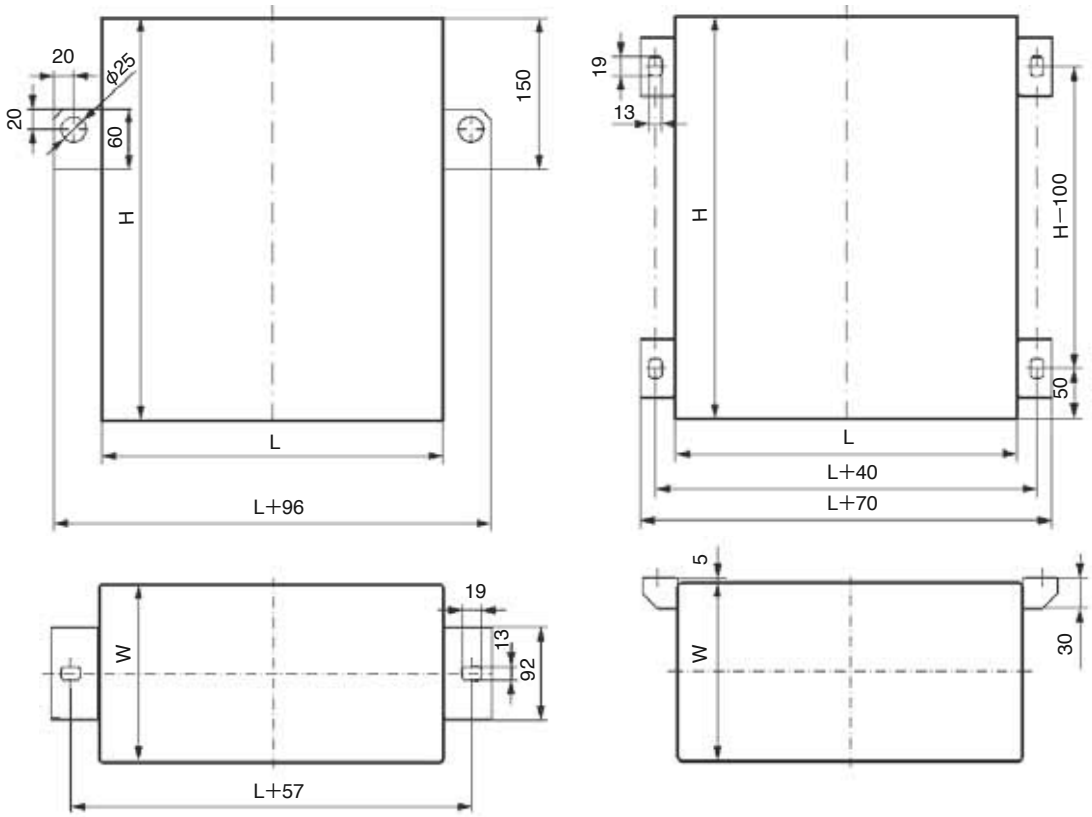

Standard terminal dimensions

F1 terminals

Clearance in air : 17mm

Creepage distance : 26mm

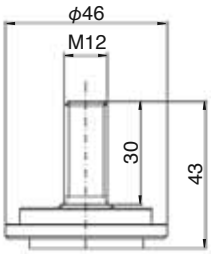

F1 M12×30

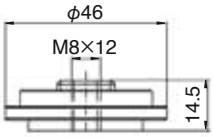

F1 iM8×12

F4 terminals

Clearance in air : 32mm

Creepage distance : 60mm

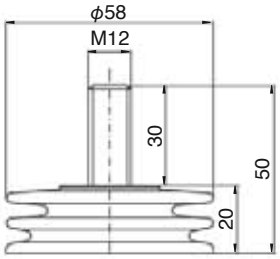

F4 M12×30

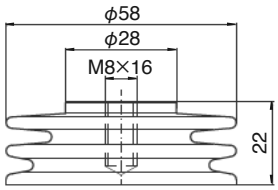

F4 iM8×16

F5 terminals

Clearance in air : 51mm

Creepage distance : 129mm

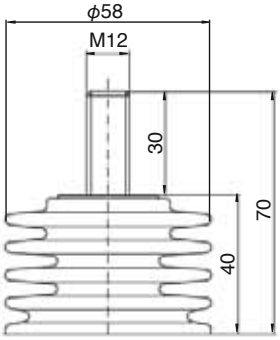

F5 M12×30

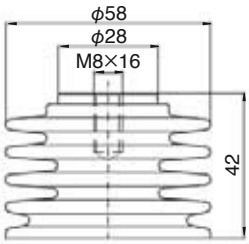

F5 iM8×16

F6 terminals

Clearance in air : 51mm

Creepage distance : 140mm

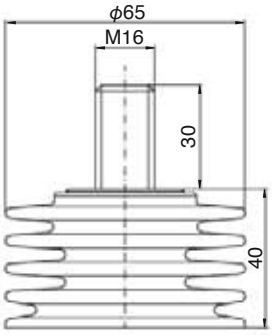

F6 M16×30

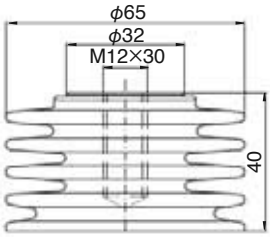

F6 iM12×30

Irreversible Pressure Switch

Type

Mechanical pressure switch with a diaphragm of EPDM or stainless steel, and a change-over contact for converting pressure into an electrical switching signal, RoHS-compliant.

Contacts

Cable-plugs 6.3mm x 0.8mm; we recommend using insulated cable plugs if operating the switch without protective cap.
Recommended cable size: ≥ 0.75mm²

Functions

The pressure switch just provides a signal for information about the rising pressure inside the capacitor.
The pressure switch does NOT have the following functions.

- provide detailed data about the exact pressure inside the capacitor
- interrupt the current path and disconnect the capacitor from its supply

Table. The switch can be used for the following signal currents :

Type of load	Type of current	Maximum voltage	Maximum current
Inductive	AC	250V rms	2A
	DC	24V	1A
Ohmic	AC	250V rms	4A
	DC	24V	2A

Fig. Pressure switch

Our pressure switch is designed as an SPDT (Single Pole, Double Throw) device.
It can therefore be used for the following options.

Table. Options for the pressure switchs :

Option	Advantage	Disadvantage
Opening switch	Monitoring of the conductor	power losses by permanent current risk of electrochemical corrosion
Closing switch	No current, no power losses No electrochemical corrosion	No conductor monitoring, risk of monitoring failure going unnoticed
Change-over switch	Additional verification of the switching contact, minimization of false alarms	Risk of incorrect cable connection during assembly process

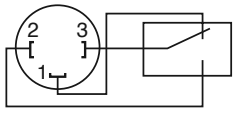

Fig. Circuitry of pressure switch

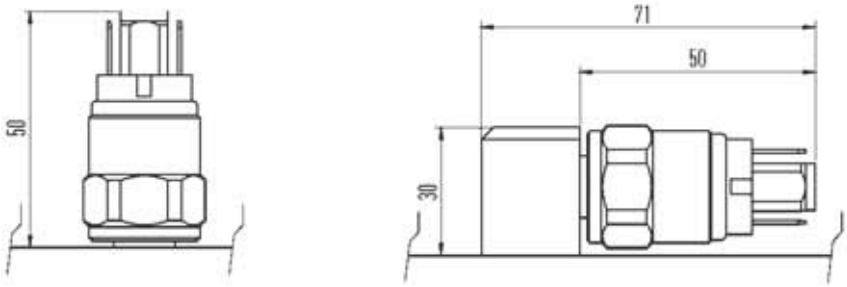

Fig. Dimension of pressure switch

Protective cap (optional, IP54)

A protection cap made of NBT can be ordered as an accessory. The cap can be used for additional protection of the pressure switch from environmental impact, for insulation and protection from accidental contact.

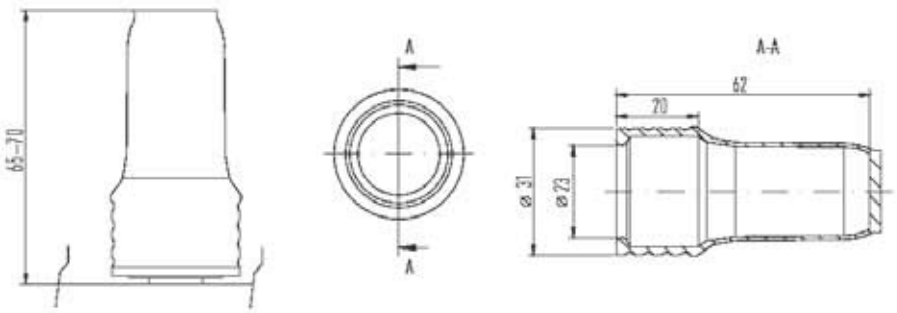

Fig. dimension of protective cap

Photo. Appearance of protective cap

NEW!

E61（DC） Series （DC Cylindrical Metallized Polypropylene Film Capacitors）

Features

- High voltage range and ultra low inductance capacitors.
- E55 series are made in dry technology.
- For DC application.

Specifications

Item	Specification
Category temperature range	−25 ～ +85℃（Includes self temperature rise）
Storage temperature	−40 ～ +85℃
Rated voltage (U_N)	500 ～ 4,000Vdc
Terminal (torque)	M6 × 5 (4Nm)
Standards	IEC 61071 : 2007
Dielectric	Polypropylene
Dielectric dissipation factor (tan δ_0)	2×10^{-4}
Capacitance tolerance	±10% (optional ±5%)
Safety devices	−
Impregnant	Solid resin based on vegetable oil, Non PCB
Material of case	Plastic (UL94V-0)
Environmental regulations	Comply with RoHS

Dimensions

Item	Specification
Terminal code	P5
Can material	Plastic (UL94V-0)
Terminal	Internal threads M6×5
	Torque : 4Nm
	I_{max} (terminal) : 40A
Degree of protection	IP00
Humidity class	F
Clearance in air	30mm(φ75) / 37.5mm(φ95)
Creepage distance	30mm(φ75) / 37.5mm(φ95)

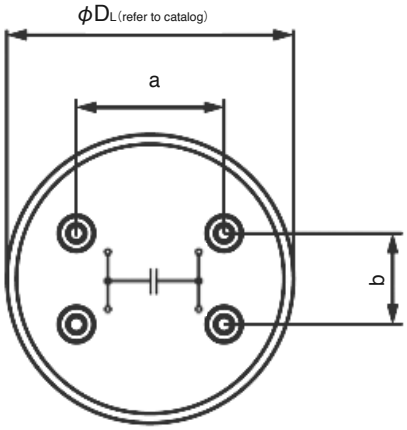

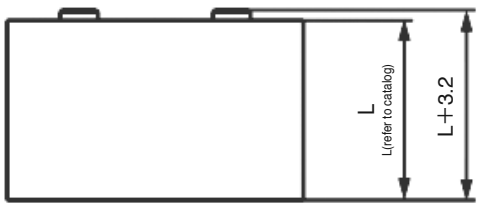

Table. Dimensions Unit : mm

D	a	b
75	42.5	25
95	49	30

Numbering system: e.g. E61, 500VDC, 190μF, φ75×56Lmm, P5 terminal

E61 . M 56 - 194 P5 0 / H

- 0 — Auxiliary symbol
- P5 — Terminal symbol
- 194 — Capacitance
- 56 — Case length
- M — Case diameter symbol
- E61 — Series name

Standard Value and Case Size

Rated Capacitance C_N [μF]	Case size Diameter ϕD [mm]	Case size Length L [mm]	Energy Contents W [J]	Series resistance (reference) R_S [mΩ]	Thermal resistance (reference) R_{th} [K/W]	Max current I_{max} [Arms]	Max peak current $\hat{I}$ [kA]	Max surge current I_S [kA]	Self inductance (reference) ESL [nH]	Weight [kg]	Part number
Rated voltage U_N : 500Vdc Us : 750V Ur : 170Vdc U_{TT} : 750Vdc											
190	75	56	24	0.85	7.5	50	2.4	7	20	0.3	E61.M56-194P50/H
325	95	56	41	0.67	4.7	70	4	12	25	0.48	E61.P56-334P50/H
560	95	78	70	1.1	3.4	60	4	12	30	0.66	E61.P78-564P50/H
Rated voltage U_N : 700Vdc Us : 1,050V Ur: 200Vdc U_{TT} : 1,050Vdc											
142	75	56	35	0.92	7.5	50	2.1	6	20	0.3	E61.M56-144P50/H
240	95	56	59	0.71	4.7	70	4	11	25	0.48	E61.P56-244P50/H
415	95	78	102	1.2	3.4	60	4	11	30	0.66	E61.P78-424P50/H
Rated voltage U_N : 900Vdc Us : 1,350V Ur : 260Vdc U_{TT} : 1,350Vdc											
110	75	56	45	0.98	7.5	45	1.8	5	20	0.3	E61.M56-114P50/H
187	95	56	76	0.75	4.7	65	3	9	25	0.48	E61.P56-194P50/H
325	95	78	132	1.3	3.4	60	3	9	30	0.66	E61.P78-334P50/H
Rated voltage U_N : 1,100Vdc Us : 1,650V Ur : 300Vdc U_{TT} : 1,650Vdc											
82	75	56	50	1.06	7.5	40	1.6	5	20	0.3	E61.M56-823P50/H
140	95	56	85	0.79	4.7	65	2.7	8	25	0.48	E61.P56-144P50/H
240	95	78	145	1.35	3.4	55	2.7	8	30	0.66	E61.P78-244P50/H
Rated voltage U_N : 1,300Vdc Us : 1,950V Ur : 300Vdc U_{TT} : 1,950Vdc											
54	75	56	46	1.21	7.5	40	1.6	5	20	0.3	E61.M56-543P50/H
93	95	56	79	0.88	4.7	60	2.2	7	25	0.48	E61.P56-933P50/H
160	95	78	135	1.5	3.4	55	2.2	7	30	0.66	E61.P78-164P50/H
Rated voltage U_N : 2,000Vdc Us : 3,000V Ur : 400Vdc U_{TT} : 3,000Vdc											
23	75	56	46	1.54	7.5	35	0.9	2.7	20	0.3	E61.M56-233P50/H
39	95	56	78	1.08	4.7	55	1.5	5	25	0.48	E61.P56-393P50/H
66	95	78	132	1.9	3.4	50	1.4	4	30	0.66	E61.P78-663P50/H
Rated voltage U_N : 2,200Vdc Us : 3,300V Ur : 400Vdc U_{TT} : 3,300Vdc											
18.5	75	56	45	1.67	7.5	35	0.8	2.4	20	0.3	E61.M56-193P50/H
31	95	56	75	1.16	4.7	55	1.3	4	25	0.48	E61.P56-313P50/H
53	95	78	128	2	3.4	45	1.3	4	30	0.66	E61.P78-533P50/H
Rated voltage U_N : 2,600Vdc Us : 3,900V Ur : 500Vdc U_{TT} : 3,900Vdc											
12	75	56	41	1.41	7.5	35	1.3	4	20	0.3	E61.M56-123P50/H
20	95	56	68	1.01	4.7	55	2.1	6	25	0.48	E61.P56-203P50/H
37	95	78	125	2.1	3.4	45	1	3	30	0.66	E61.P78-373P50/H
Rated voltage U_N : 3,300Vdc Us : 4,950V Ur : 700Vdc U_{TT} : 4,950Vdc											
6.5	75	56	35	1.72	7.5	30	1	2.9	20	0.3	E61.M56-702P50/H
11.5	95	56	63	1.15	4.7	45	1.7	5	25	0.48	E61.P56-123P50/H
Rated voltage U_N : 3,600Vdc Us : 5,400V Ur : 800Vdc U_{TT} : 5,400Vdc											
6	75	56	39	1.77	7.5	30	0.9	2.8	20	0.3	E61.M56-602P50/H
10	95	56	65	1.23	4.7	45	1.5	5	25	0.48	E61.P56-103P50/H
Rated voltage U_N : 4,000Vdc Us : 6,000V Ur : 800Vdc U_{TT} : 6,000Vdc											
4.5	75	56	36	2.02	7.5	25	0.8	2.3	20	/H	E61.M56-452P50/H
7.5	95	56	60	1.38	4.7	40	1.3	4	25	/H	E61.P56-752P50/H

E62（AC） Series （AC Cylindrical Metallized Polypropylene Film Capacitos）

Features

- Perfect for non-sinusoidal voltages and pulsed currents.
- Housed in a hermetically sealed aluminum can which is filled with environmentally friendly plant oil as standard.
- The integrated overpressure disconnector ensure safe operation and controlled disconnection in the event of overload or failure at the end of operating life.

Specifications

Item	Specification
Category temperature range	−40 ～ +70℃（+85℃ / Includes self temperature rise）
Storage temperature	−40 ～ +85℃
Rated voltage (U_N)	420 ～ 4,000Vac
Stud bolt (torque)	M12×16/18 (15 ±1Nm)
Standards	IEC 61071 : 2007
Dielectric	Polypropylene
Dielectric dissipation factor (tan δ_0)	2×10^{-4}
Capacitance tolerance	±10% (optional ±5%)
Safety devices	Overpressure disconnector
Impregnant	Liquid, based on vegetable oil, Non PCB
Material of case	Aluminum
Environmental regulations	Comply with RoHS

Numbering system: e.g. E62, 420VAC, 60μF, φ50×85Lmm, G1 terminal

E62 . G 85 - 603 G1 0 / H

- Auxiliary symbol
- Terminal symbol
- Capacitance
- Case length
- Case diameter symbol
- Series name

Standard Value and Case Size

Rated Capacitance C_N (μF)	Case size Diameter φD (mm)	Case size Length L (mm)	Rated DC voltage U_N (DC) (Vdc)	Max current (rms) I_{max} (Arms)	Max peak current $\hat{I}$ (kA)	Max surge current I_S (kA)	Rated energy contents W (J)	Series resistance (reference) R_S (mΩ)	Self inductance (reference) ESL (nH)	Thermal resistance (reference) R_{th} (K/W)	Terminal	Weight (kg)	Part number
Rated AC voltage U_N (AC) : 420Vac			U_{rms} : 300V U_S : 1,050V Test voltage (T-T) U_{TT} : 1,050Vdc Test voltage (T-C) U_{TC} : 3,000Vac										
42	60	80	700	20	0.8	2.5	10	2.3	90	9.3	Z1	0.27	E62.K80-433Z10/H
60	50	85	700	32	0.7	2.1	15	3.3	100	10.5	G1	0.18	E62.G85-603G10/H
75	60	105	700	40	0.8	2.5	18	2.1	110	7.1	C68	0.31	E62.K10-753C68/H
95	65	105	700	30	1.0	3.0	23	2.3	110	6.5	Z1	0.40	E62.L10-953Z10/H
100	65	95	700	40	1.15	3.45	25	3.1	100	7.2	G1	0.33	E62.L95-104G10/H
120	75	105	700	50	1.4	4.2	29	1.0	140	5.7	C6	0.5	E62.M10-124C60/H
130	65	109	700	40	1.2	3.6	32	3.4	110	6.3	G1	0.4	E62.L10-134G10/H
130	75	105	700	30	1.4	4.0	32	2.4	110	5.7	Z1	0.5	E62.M10-134Z10/H
150	65	135	700	35	1.2	3.6	37	4.4	110	5.1	G1	0.5	E62.L13-154G10/H
167	85	112	700	56	1.8	5.0	41	1.2	110	4.7	S2	0.65	E62.N11-174S20/H
170	85	105	700	50	2.0	6.0	42	0.82	140	5	C6	0.6	E62.N10-174C60/H
200	65	145	700	30	1.2	3.6	49	4.4	140	4.7	G1	0.5	E62.L14-204G10/H
217	95	112	700	56	2.4	7.0	53	1.1	110	4.2	S2	0.85	E62.P11-224S20/H
220	95	105	700	50	2.5	7.5	54	1.3	140	4.5	C6	0.8	E62.P10-224C60/H
250	85	176	700	80	3.0	10.0	61	1.2	160	3	C6	1.2	E62.N17-254C60/H
340	85	169	700	56	1.8	3.0	83	1.8	110	3.1	S2	1.0	E62.N16-344S20/H
400	85	245	700	80	4.5	13.5	98	0.68	160	2.1	C6	1.5	E62.N24-404C60/H
434	95	179	700	56	5.0	14.0	106	1.0	120	2.6	S2	1.3	E62.P17-434S20/H
470	95	176	700	80	5.3	15.9	115	0.53	160	2.7	C6	1.3	E62.P17-474C60/H
500	100	176	700	80	5.7	17.1	123	0.57	160	2.5	C6	1.5	E62.Q17-504C60/H
540	95	245	700	80	6.0	18.0	132	0.9	170	1.9	C6	2.2	E62.P24-544C60/H
2,000	136	320	700	100	15	20	490	0.6	190	1	C6	4.9	E62.S32-205C60/H

Standard Value and Case Size

Rated Capacitance C_N 〔μF〕	Case size Diameter ϕD 〔mm〕	Case size Length L 〔mm〕	Rated DC voltage U_N (DC) 〔Vdc〕	Max current (rms) I_{max} 〔Arms〕	Max peak current $\hat{I}$ 〔kA〕	Max surge current I_S 〔kA〕	Rated energy contents W 〔J〕	Series resistance (reference) R_S 〔mΩ〕	Self inductance (reference) ESL 〔nH〕	Thermal resistance (reference) R_{th} 〔K/W〕	Terminal symbol	Weight 〔kg〕	Part number
Rated AC voltage U_N (AC) : 500Vac			U_{rms} : 360V U_S : 1,260V Test voltage (T-T) U_{TT} : 1,260Vdc Test voltage (T-C) U_{TC} : 3,000Vac										
30	60	80	840	20	0.7	2.2	11	2.4	90	9.3	Z1	0.27	E62.K80-303Z10/H
40	50	85	840	30	0.6	1.7	14	3.6	100	10.5	G1	0.18	E62.G85-403G10/H
50	55	85	840	25	0.7	2.1	18	4.4	110	9.5	G1	0.21	E62.H85-503G10/H
55	60	105	840	40	0.7	2.2	19	2.2	110	7.1	C68	0.31	E62.K10-553C68/H
70	65	105	840	30	0.9	2.8	25	2.4	110	6.5	Z1	0.40	E62.L10-703Z10/H
75	65	95	840	40	1.0	3.0	26	2.3	100	7.2	G1	0.33	E62.L95-753G10/H
100	65	135	840	40	0.9	2.7	35	4.3	120	5.1	G1	0.5	E62.L13-104G10/H
120	75	120	840	39	1.3	4.0	42	2.6	110	5.0	Z1	0.6	E62.M12-124Z10/H
150	85	124	840	56	1.6	5.0	53	1.4	110	4.2	S2	0.75	E62.N12-154S20/H
200	65	145	700	30	1.2	3.6	49	4.4	140	4.7	G1	0.5	E62.L14-204G10/H
250	85	169	840	56	1.6	5.0	88	1.9	110	3.1	S2	1.0	E62.N16-254S20/H
300	95	176	840	80	4.1	12.3	106	1.1	160	2.7	C6	1.3	E62.P17-304C60/H
320	95	179	840	56	4.0	13	113	1.0	120	2.6	S2	1.3	E62.P17-324S20/H
620	116	245	840	100	9.0	15	219	0.58	160	1.6	C6	2.7	E62.R24-624C60/H
750	116	245	840	100	10	20	265	0.57	170	1.6	C6	2.7	E62.R24-754C60/H
1,000	136	245	840	100	14	20	353	0.56	170	1.3	C6	3.7	E62.S24-105C60/H
1,500	136	320	840	100	15	20	529	0.5	190	1	C6	4.9	E62.S32-155C60/H
Rated AC voltage U_N (AC) : 640Vac			U_{rms} : 450V U_S : 1,500V Test voltage (T-T) U_{TT} : 1,500Vdc Test voltage (T-C) U_{TC} : 3,000Vac										
15	50	62	1,000	25	0.24	0.7	8	2.9	100	14.4	G1	0.14	E62.G62-153G10/H
23	60	80	1,000	20	0.7	2.0	12	2.5	90	9.3	Z1	0.27	E62.K80-233Z10/H
30	50	85	1,000	33	0.5	1.4	15	3.9	100	10.5	G1	0.18	E62.G85-303G10/H
41	60	105	1,000	40	0.6	1.9	21	2.4	110	7.1	C68	0.31	E62.K10-413C68/H
50	65	95	1,000	40	0.8	2.4	25	3.4	100	7.2	G1	0.33	E62.L95-503G10/H
52	65	105	1,000	30	0.8	2.4	26	2.5	110	6.5	Z1	0.4	E62.L10-523Z10/H
68	65	109	1,000	30	0.9	2.7	34	3.7	100	6.3	G1	0.4	E62.L10-683G10/H
75	75	105	1,000	43	1.2	3.6	38	2.7	110	5.7	L1	0.5	E62.M10-753L10/H
80	85	105	1,000	43	1.3	3.8	40	1.4	110	5.0	L1	0.6	E62.N10-803L10/H
100	85	120	1,000	80	3.0	9.0	50	0.53	100	4.4	C6	0.9	E62.N12-104C60/H
120	95	105	1,000	43	1.9	5.8	60	1.60	110	4.5	L1	0.8	E62.P10-124L10/H
140	85	164	1,000	100	4.0	12	70	0.81	160	3.2	C6	1.0	E62.N16-144C60/H
145	75	164	1,000	39	1.1	3.0	73	3.3	110	3.6	Z1	0.75	E62.M16-154Z10/H
155	85	149	1,000	56	1.4	4.0	78	1.8	110	3.5	S2	0.9	E62.N14-164S20/H
200	95	176	1,000	80	3.5	10.5	100	0.7	160	2.7	C6	1.3	E62.P17-204C60/H
220	95	159	1,000	56	1.8	5.0	110	1.7	130	2.9	S2	1.2	E62.P15-224S20/H
250	100	176	1,000	80	4.0	12.0	125	0.63	160	2.5	C6	1.5	E62.Q17-254C60/H
250	95	176	1,000	43	4.0	12.0	125	1.30	130	2.7	L1	1.3	E62.P17-254L10/H
350	116	176	1,000	80	5.6	16.8	175	0.57	160	2.2	C6	2.0	E62.R17-354C60/H
500	116	245	1,000	100	7.8	20.0	250	0.6	170	1.6	C6	2.7	E62.R24-504C60/H
750	116	320	1,000	100	12.0	20.0	375	0.64	190	1.2	C6	3.5	E62.R32-754C60/H
800	136	245	1,000	100	12.8	20.0	400	0.63	170	1.3	C6	3.7	E62.S24-804C60/H
1,000	136	320	1,000	100	15.6	20.0	500	0.62	190	1.0	C6	4.9	E62.S32-105C60/H
Rated AC voltage U_N (AC) : 680Vac			U_{rms} : 480V US : 1,680V Test voltage (T-T) U_{TT} : 1,680Vdc Test voltage (T-C) U_{TC} : 3,000Vac										
17.5	60	80	1,120	20	0.6	1.7	11	2.6	90	9.3	Z1	0.27	E62.K80-183Z10/H
31	60	105	1,120	40	0.6	1.7	19	2.6	110	7.1	C68	0.31	E62.K10-313C68/H
39	65	105	1,120	30	0.7	2.1	24	2.7	110	6.5	Z1	0.40	E62.L10-393Z10/H
60	75	105	1,120	43	1.1	3.3	38	2.3	110	5.7	L1	0.50	E62.M10-603L10/H
66	75	120	1,120	39	1.0	2.9	41	2.6	110	5.0	Z1	0.60	E62.M12-663Z10/H
68	85	105	1,120	43	1.2	3.7	43	1.5	110	5.0	L1	0.60	E62.N10-683L10/H
86	85	124	1,120	56	1.3	4.0	54	1.6	110	4,2	S2	0.75	E62.N12-863S20/H
100	100	105	1,120	43	1.8	5.5	63	1.3	110	4.2	L1	0.90	E62.Q10-104L10/H
100	95	120	1,120	80	3.0	10.0	63	1.1	150	3.9	C6	0.9	E62.P12-104C60/H
150	116	124	1,120	80	5.0	14.0	94	0.95	150	3.2	C6	1.3	E62.R12-154C60/H
152	95	149	1,120	56	1.6	5.0	95	1.7	110	3.1	S2	1.1	E62.P14-154S20/H
180	95	176	1,120	43	3.3	9.9	113	1.4	130	2.7	L1	1.3	E62.P17-184L10/H
200	100	176	1,120	80	3.7	11.1	125	0.66	160	2.5	C6	1.5	E62.Q17-204C60/H
280	116	176	1,120	80	5.1	15.3	176	0.6	160	2.2	C6	2.0	E62.R17-284C60/H
400	116	245	1,120	100	7.3	20.0	251	0.6	170	1.6	C6	2.7	E62.R24-404C60/H
600	136	245	1,120	100	10.7	20.0	376	0.56	170	1.3	C6	3.7	E62.S24-604C60/H
800	136	320	1,120	100	14.8	20.0	502	0.63	190	1.0	C6	4.9	E62.S32-804C60/H

Standard Value and Case Size

Rated Capacitance C_N 〔μF〕	Case size Diameter ϕD 〔mm〕	Case size Length L 〔mm〕	Rated DC voltage U_N (DC) 〔Vdc〕	Max current (rms) I_{max} 〔Arms〕	Max peak current $\hat{I}$ 〔kA〕	Max surge current I_S 〔kA〕	Rated energy contents W 〔J〕	Series resistance (reference) R_S 〔mΩ〕	Self inductance (reference) ESL 〔nH〕	Thermal resistance (reference) R_{th} 〔K/W〕	Terminal symbol	Weight 〔kg〕	Part number
Rated AC voltage U_N (AC) : 750Vac			U_{rms} : 530V U_S : 1,900V Test voltage (T-T) U_{TT} : 1,890Vdc Test voltage (T-C) U_{TC} : 3,000Vac										
10	50	62	1,260	20	0.4	1.2	8	3.1	110	14.4	G1	0.14	E62.G62-103G10/H
13	60	80	1,260	20	0.5	1.4	10	2.8	90	9.3	Z1	0.27	E62.K80-133Z10/H
20	50	85	1,260	27	0.4	1.2	16	4.2	100	10.5	G1	0.18	E62.G85-203G10/H
24	60	105	1,260	40	0.5	1.4	19	2.9	110	7.1	C68	0.31	E62.K10-243C68/H
30	65	105	1,260	30	0.6	1.8	24	3.2	110	6.5	Z1	0.4	E62.L10-303Z10/H
33	65	95	1,260	37	0.7	2.0	26	3.6	100	7.2	G1	0.33	E62.L95-333G10/H
40	65	109	1,260	30	0.7	2.0	32	5.6	120	6.3	G1	0.4	E62.L10-403G10/H
47	75	105	1,260	43	1.0	2.9	37	2.4	110	5.7	L1	0.5	E62.M10-473L10/H
51	75	120	1,260	39	0.8	2.5	40	3.1	110	5.0	Z1	0.6	E62.M12-513Z10/H
60	65	145	1,260	35	0.7	2.0	48	6.2	140	4.7	G1	0.5	E62.L14-603G10/H
60	85	105	1,260	43	1.2	3.7	48	1.5	110	5.0	L1	0.6	E62.N10-603L10/H
65	85	124	1,260	56	1.1	3.0	52	1.8	110	4.2	S2	0.75	E62.N12-653S20/H
75	95	105	1,260	43	1.5	4.6	60	1.4	110	4.5	L1	0.8	E62.P10-753L10/H
116	95	149	1,260	56	1.4	4.0	92	1.8	110	3.1	S2	1.1	E62.P14-124S20/H
150	95	176	1,260	43	3.1	9.3	119	1.4	130	2.7	L1	1.3	E62.P17-154L10/H
150	100	176	1,260	80	3.1	9.3	119	0.7	160	2.5	C6	1.5	E62.Q17-154C60/H
220	116	176	1,260	80	4.5	13.5	175	0.61	160	2.2	C6	2	E62.R17-224C60/H
330	116	245	1,260	100	6.8	20.0	262	0.61	170	1.6	C6	2.7	E62.R24-334C60/H
350	116	245	1,260	100	6.8	20.0	278	0.59	160	1.6	C6	2.7	E62.R24-334C60/H
500	136	245	1,260	100	10.1	20.0	397	0.56	170	1.3	C6	3.7	E62.S24-504C60/H
600	136	320	1,260	100	12.4	20.0	476	0.64	190	1.0	C6	4.9	E62.S32-604C60/H
Rated AC voltage U_N (AC) : 850Vac			U_{rms} : 600V U_S : 2,100V Test voltage (T-T) U_{TT} : 2,100Vdc Test voltage (T-C) U_{TC} : 3,000Vac										
10.5	60	80	1,400	20	0.4	1.3	10	2.9	90	9.3	Z1	0.27	E62.K80-113Z10/H
15	50	85	1,400	25	0.3	0.9	15	4.6	80	10.5	G1	0.18	E62.G85-153G10/H
16	50	85	1,400	30	0.4	1.1	16	4.5	100	10.5	G1	0.18	E62.G85-163G10/H
19	60	105	1,400	40	0.4	1.3	19	3.1	110	7.1	C68	0.31	E62.K10-193C68/H
24.5	65	105	1,400	30	0.6	1.7	24	3.4	110	6.5	Z1	0.40	E62.L10-253Z10/H
25	65	95	1,400	40	0.6	1.7	25	3.9	100	7.2	G1	0.33	E62.L95-253G10/H
30	65	109	1,400	30	0.6	1.7	29	4.4	110	6.3	G1	0.4	E62.L10-303G10/H
33	75	105	1,400	38	0.8	2.3	32	2.7	110	5.7	L1	0.5	E62.M10-333L10/H
41	75	120	1,400	39	0.8	2.3	40	3.2	110	5.0	Z1	0.6	E62.M12-413Z10/H
47	85	105	1,400	43	1.1	3.2	46	2.2	110	5.0	L1	0.6	E62.N10-473L10/H
50	65	145	1,400	25	0.6	1.8	49	5.6	120	4.7	G1	0.5	E62.L14-503G10/H
53	85	124	1,400	56	1.0	2.9	52	1.9	110	4.2	S2	0.75	E62.N12-533S20/H
60	95	105	1,400	43	1.4	4.1	59	1.4	110	4.5	L1	0.8	E62.P10-603L10/H
80	85	176	1,400	80	1.8	5.0	78	1.6	160	3.0	C6	1.2	E62.N17-803C60/H
94	95	149	1,400	56	1.3	4.0	92	1.9	110	3.1	S2	1.1	E62.P14-943S20/H
120	95	176	1,400	80	2.7	8.2	118	0.74	160	2.7	C6	1.3	E62.P17-124C60/H
130	100	176	1,400	80	3.0	8.9	127	0.71	160	2.5	C6	1.5	E62.Q17-134C60/H
180	116	176	1,400	80	4.1	12.3	176	0.63	160	2.2	C6	2.0	E62.R17-184C60/H
270	116	245	1,400	100	6.2	18.6	265	0.62	170	1.6	C6	2.7	E62.R24-274C60/H
400	136	245	1,400	100	9.2	20.0	392	0.58	170	1.3	C6	3.7	E62.S24-404C60/H
500	136	320	1,400	100	11.4	20.0	490	0.4	190	1.0	C6	4.9	E62.S32-504C60/H
Rated AC voltage U_N (AC) : 1,000Vac			U_{rms} : 720V U_S : 2,500V Test voltage (T-T) U_{TT} : 2,520Vdc Test voltage (T-C) U_{TC} : 3,500Vac										
4.7	50	62	1,680	25	0.5	1.4	2	3.6	110	14.4	G1	0.1	E62.G62-472G10/H
6.8	60	80	1,680	20	0.7	2.2	3	2.4	90	9.3	Z1	0.3	E62.K80-682Z10/H
8	50	85	1,680	26	0.5	1.4	4	4.0	120	10.5	G1	0.2	E62.G85-802G10/H
10	50	85	1,680	26	0.6	1.7	5	3.6	100	10.5	G1	0.2	E62.G85-103G10/H
12	55	85	1,680	30	0.7	2.1	6	3.0	110	9.5	G1	0.2	E62.H85-123G10/H
13	60	105	1,680	40	0.7	2.2	7	2.3	110	7.1	C68	0.3	E62.K10-133C68/H
16	65	95	1,680	40	1.0	2.9	8	3.3	110	7.2	G1	0.3	E62.L95-163G10/H
16.5	65	105	1,680	30	0.9	2.8	8	2.7	110	6.5	Z1	0.4	E62.L10-253Z10/H
18	65	95	1,680	40	1.0	3.0	9	3.2	100	7.2	G1	0.3	E62.L95-183G10/H
20	75	105	1,680	50	1.2	3.5	10	1.2	140	5.7	C6	0.5	E62.M10-203C60/H
22.5	75	105	1,680	30	1.3	4.0	11	2.5	110	5.7	Z1	0.5	E62.M10-233Z10/H
28	85	105	1,680	50	1.6	4.9	14	0.94	140	5.0	C6	0.6	E62.N10-283C60/H
33	95	105	1,680	50	1.9	5.7	17	0.85	140	4.5	C6	0.8	E62.P10-333C60/H
36	85	124	1,680	56	1.6	5.0	18	1.4	110	4.2	S2	0.8	E62.N12-363S20/H
64	95	149	1,680	56	2.1	6.0	32	1.5	110	3.1	S2	1.1	E62.P14-643S20/H
68	95	176	1,680	80	3.9	11.7	34	0.65	160	2.7	C6	1.3	E62.P17-683C60/H
80	100	176	1,680	80	4.6	13.8	40	0.61	160	2.5	C6	1.5	E62.Q17-803C60/H
120	116	176	1,680	80	7.0	20.0	60	0.54	160	2.2	C6	2.0	E62.R17-124C60/H
180	116	245	1,680	100	10.4	20.0	90	0.57	170	1.6	C6	2.7	E62.R24-184C60/H
220	116	320	1,680	100	14.2	20.0	110	0.64	180	1.2	C6	3.5	E62.R32-224C60/H
250	136	245	1,680	100	14.5	20.0	125	0.54	170	1.3	C6	3.7	E62.S24-254C60/H
330	136	320	1,680	100	15.0	20.0	165	0.61	190	1.0	C6	4.9	E62.S32-334C60/H

Standard Value and Case Size

Rated Capacitance C_N [μF]	Case size Diameter ϕD [mm]	Case size Length L [mm]	Rated DC voltage U_N (DC) [Vdc]	Max current (rms) I_{max} [Arms]	Max peak current $\hat{I}$ [kA]	Max surge current I_S [kA]	Rated energy contents W [J]	Series resistance (reference) R_S [mΩ]	Self inductance (reference) ESL [nH]	Thermal resistance (reference) R_{th} [K/W]	Terminal symbol	Weight [kg]	Part number
Rated AC voltage U_N (AC) : 1,200Vac			U_{rms} : 850V U_S : 3,000V Test voltage (T-T) U_{TT} : 3,000Vdc Test voltage (T-C) U_{TC} : 4,000Vac										
5	60	80	2,000	20	0.6	1.9	4	2.6	90	9.3	Z1	0.3	E62.K80-502Z10/H
6.8	50	85	2,000	33	0.5	1.5	5	3.7	100	10.5	G1	0.2	E62.G85-682G10/H
9.5	60	105	2,000	40	0.6	1.9	7	2.5	110	7.1	C68	0.3	E62.K10-952C68/H
10	65	95	2,000	40	0.7	2.1	7	3.7	100	7.2	G1	0.3	E62.L95-103G10/H
12	65	105	2,000	30	0.8	2.4	9	2.9	110	6.5	Z1	0.4	E62.L10-123Z10/H
15	65	109	2,000	40	0.8	2.4	11	3.9	120	6.3	G1	0.4	E62.L10-153G10/H
20	65	135	2,000	30	0.8	2.4	14	4.7	120	5.1	G1	0.5	E62.L13-203G11/H
21	75	120	2,000	30	1.1	3.0	15	2.8	110	5.0	Z1	0.6	E62.M12-213Z10/H
26.5	85	124	2,000	56	1.4	4.0	19	1.6	110	4.2	S2	0.8	E62.N12-273S20/H
30	65	160	2,000	40	1.0	3.0	22	5.3	130	4.3	G1	0.6	E62.L16-303G10/H
32	100	105	2,000	50	2.0	6.0	23	0.79	140	4.2	C6	0.9	E62.Q10-323C60/H
33	85	140	2,000	56	1.3	4.0	24	2.2	140	3.7	S2	0.9	E62.N14-333S20/H
33	85	176	2,000	80	2.2	7.0	24	1.3	160	3.0	C6	1.2	E62.N17-333C60/H
40	85	176	2,000	80	2.7	8.1	29	0.76	160	3.0	C6	1.2	E62.N17-403C60/H
47	95	149	2,000	56	1.8	5.0	34	1.6	110	3.1	S2	1.1	E62.P14-473S20/H
53	85	245	2,000	80	4.0	11.0	38	1.0	160	2.1	C6	1.7	E62.N24-533C60/H
68	85	280	2,000	80	3.6	10.8	49	0.81	160	1.9	C6	1.8	E62.N28-683C60/H
80	95	245	1,900	80	5.0	15.0	58	1.0	170	1.9	C6	1.8	E62.P24-803C60/H
100	116	176	2,000	80	3.2	9.6	72	1.0	150	2.2	C6	2.0	E62.R17-104C60/H
150	116	280	2,000	100	8.0	20.0	108	1.4	180	1.4	C6	3.1	E62.R28-154C60/H
Rated AC voltage U_N (AC) : 1,350Vac			U_{rms} : 960V U_S : 3,300V Test voltage (T-T) U_{TT} : 3,375Vdc Test voltage (T-C) U_{TC} : 4,200Vac										
4	50	85	2,250	26	0.3	1.0	4	5.0	120	10.5	G1	0.2	E62.G85-402G10/H
5	50	85	2,250	25	0.4	1.2	5	4.4	100	10.5	G1	0.2	E62.G85-502G10/H
6.8	55	85	2,250	25	0.5	1.6	6	4.0	110	9.5	G1	0.2	E62.H85-682G10/H
10	75	105	2,250	45	0.8	2.3	9	1.6	140	5.7	C6	0.5	E62.M10-103C60/H
15	85	105	2,250	50	1.1	3.3	14	1.2	120	5.0	C6	0.6	E62.N10-153C60/H
16	85	105	2,250	50	1.2	3.7	15	1.1	140	5.0	C6	0.6	E62.N10-163C60/H
20	95	105	2,250	50	1.5	4.6	18	0.96	140	4.5	C6	0.8	E62.P10-203C60/H
22	75	176	2,250	80	1.9	5.7	20	0.97	160	3.4	C6	0.8	E62.M17-223C60/H
40	95	176	2,250	80	3.1	9.3	36	0.71	160	2.7	C6	1.3	E62.P17-403C60/H
47	100	176	2,250	80	3.6	10.8	43	0.67	160	2.5	C6	1.5	E62.Q17-473C60/H
68	100	245	2,250	80	5.0	15.0	62	1.0	160	1.8	C6	2.0	E62.Q24-683C60/H
68	116	176	2,250	80	5.3	15.9	62	0.59	160	2.2	C6	2.0	E62.R17-683C60/H
100	116	245	2,250	100	7.7	20.0	91	0.6	170	1.6	C6	2.7	E62.R24-104C60/H
150	136	245	2,250	100	11.6	20.0	137	0.56	170	1.3	C6	3.7	E62.S24-154C60/H
200	136	320	2,250	100	15.0	20.0	182	0.62	190	1.0	C6	4.9	E62.S32-204C60/H
Rated AC voltage U_N (AC) : 1,700Vac			U_{rms} : 1,200V U_S : 4,200V Test voltage (T-T) U_{TT} : 4,200Vdc Test voltage (T-C) U_{TC} : 5,000Vac										
4	75	105	2,800	48	0.8	1.8	6	2.8	140	5.7	C6	0.5	E62.M10-402C60/H
6.8	75	105	2,800	46	0.7	2.0	10	1.8	140	5.7	C6	0.5	E62.M10-682C60/H
10	85	105	2,800	50	1.0	2.9	14	1.3	140	5.0	C6	0.6	E62.N10-103C60/H
12	95	105	2,800	50	1.2	3.5	17	1.2	140	4.5	C6	0.8	E62.P10-123C60/H
12	75	176	2,800	80	1.9	5.7	17	1.4	160	3.4	C6	0.8	E62.M17-123C60/H
25	95	176	2,800	80	2.4	7.3	36	0.8	160	2.7	C6	1.3	E62.P17-253C60/H
30	100	176	2,800	80	2.9	8.7	43	0.73	160	2.5	C6	1.5	E62.Q17-303C60/H
40	116	176	2,800	80	3.9	11.7	58	0.65	160	2.2	C6	2.0	E62.R17-403C60/H
60	116	245	2,800	100	5.8	17.4	87	0.64	170	1.6	C6	2.7	E62.R24-603C60/H
90	136	245	2,800	100	8.7	20.0	130	0.58	170	1.3	C6	3.7	E62.S24-903C60/H
100	136	280	2,800	100	8.0	20.0	145	0.94	190	1.2	C6	4.3	E62.S28-104C60/H
125	136	320	2,800	100	12.1	20.0	181	0.64	190	1.0	C6	4.9	E62.S32-134C60/H
Rated AC voltage U_N (AC) : 2,000Vac			U_{rms} : 1,400V U_S : 5,100V Test voltage (T-T) U_{TT} : 5,100Vdc Test voltage (T-C) U_{TC} : 5,800Vac										
10	75	176	3,400	40	1.2	3.5	20	2.1	170	3.4	C6	0.8	E62.M17-103C60/H
15	95	176	3,400	40	1.0	3.1	30	1.6	170	2.7	C6	1.3	E62.P17-153C60/H
20	100	176	3,400	50	2.3	7.0	40	1.3	160	2.5	C6	1.5	E62.Q17-203C60/H
30	116	176	3,400	50	3.6	10.8	60	1.0	160	2.2	C6	2.0	E62.R17-303C60/H
40	116	320	3,400	80	4.6	13.8	80	1.1	190	1.2	C6	3.5	E62.R32-403C60/H
50	136	245	3,400	100	9.0	20.0	100	0.88	170	1.3	C6	3.7	E62.S24-503C60/H
54	116	320	3,400	80	5.9	17.7	108	1.1	180	1.2	C6	3.5	E62.R32-543C60/H
60	116	320	3,400	100	6.0	18.0	120	1.0	180	1.2	C6	3.5	E62.R32-603C60/H
90	136	320	3,400	100	9.7	20.0	180	1.0	190	1.0	C6	4.9	E62.S32-903C60/H

Standard Value and Case Size

Rated Capacitance C_N 〔μF〕	Case size Diameter ϕD 〔mm〕	Case size Length L 〔mm〕	Rated DC voltage U_N (DC) 〔Vdc〕	Max current (rms) I_{max} 〔Arms〕	Max peak current $\hat{I}$ 〔kA〕	Max surge current I_S 〔kA〕	Rated energy contents W 〔J〕	Series resistance (reference) R_S 〔mΩ〕	Self inductance (reference) ESL 〔nH〕	Thermal resistance (reference) R_{th} 〔K/W〕	Terminal symbol	Weight 〔kg〕	Part number
Rated AC voltage U_N (AC) : 2,100Vac			U_{rms} : 1,500V U_S : 5,400V Test voltage (T-T) U_{TT} : 5,400Vdc Test voltage (T-C) U_{TC} : 6,200Vac										
13	95	176	3,600	80	2.6	8.0	84	1.3	160	2.7	C6	1.3	E62.P17-133C60/H
33	116	205	3,600	80	3.3	9.9	214	1.2	150	1.9	CR	2.4	E62.R20-333C60/H
40	116	320	3,600	100	5.4	16.2	259	1.1	180	1.2	CR	3.5	E62.R32-403CR0/H
60	136	320	3,600	100	7.9	20.0	389	1.0	190	1.0	CR	4.9	E62.S32-603CR0/H
70	136	320	3,600	100	8.0	20.0	454	1.1	190	1.0	CR	4.9	E62.S32-703CR0/H
Rated AC voltage U_N (AC) : 2,400Vac			U_{rms} : 1,700V U_S : 6,000V Test voltage (T-T) U_{TT} : 6,000Vdc Test voltage (T-C) U_{TC} : 6,800Vac										
6.8	75	176	4,000	40	0.9	2.8	54	2.5	160	3.4	C6	0.8	E62.M17-682C60/H
10	85	176	4,000	40	1.4	4.2	80	1.9	170	3.0	C6	1.2	E62.N17-103C60/H
20	116	176	4,000	50	2.7	8.0	160	1.6	160	2.2	C6	2.0	E62.R17-203C61/H
22	116	176	4,000	50	2.8	8.7	176	1.1	160	2.2	CR	2.0	E62.R17-223CR0/H
25	136	176	4,000	80	5.6	16.8	200	0.59	160	1.9	CR	2.6	E62.S17-253CR0/H
33	136	245	4,000	100	7.5	20.0	264	0.6	160	1.3	CR	3.7	E62.S24-333CR0/H
Rated AC voltage U_N (AC) : 4,000Vac			U_{rms} : 2,800V U_S : 7,500V Test voltage (T-T) U_{TT} : 7,500Vdc Test voltage (T-C) U_{TC} : 8,200Vac										
0.2	75	105	5,000	16	0.7	2.2	3	5.1	150	5.7	CR	0.6	E62.M10-201CR0/H
1.0	75	120	5,000	40	0.8	2.4	13	3.9	150	5.0	CR	0.6	E62.M12-102CR0/H
1.8	85	120	5,000	40	1.4	4.0	23	2.7	150	4.4	CR	0.9	E62.N12-182CR0/H
1.9	95	120	5,000	40	1.4	4.0	24	2.6	150	3.9	CR	0.9	E62.P12-192CR0/H
2.2	95	120	5,000	40	1.7	5.1	28	2.0	150	3.9	CR	0.9	E62.P12-222CR0/H
4.7	95	205	5,000	40	3.7	11.1	59	1.2	170	2.3	CR	1.6	E62.P20-472CR0/H
6.0	116	205	5,000	80	4.7	14.1	75	0.8	160	1.9	CR	2.7	E62.R20-602CR0/H
10	116	280	5,000	50	6.0	18.0	125	2.6	180	1.4	CR	3.11	E62.R28-103CR0/H

Dimensions（E62 series）

C6/C68 terminal
（Can diameter : φ60 ～ 136mm）

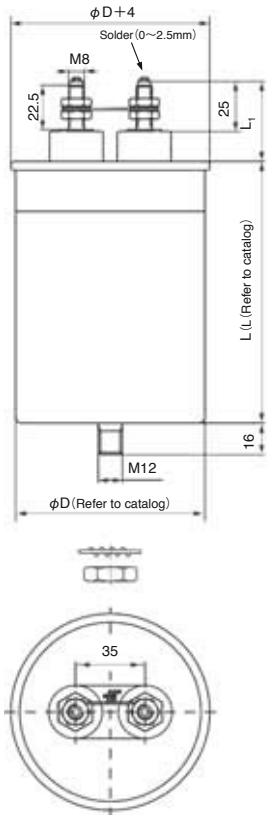

CR terminal
（Can diameter : φ75 ～ 136mm）

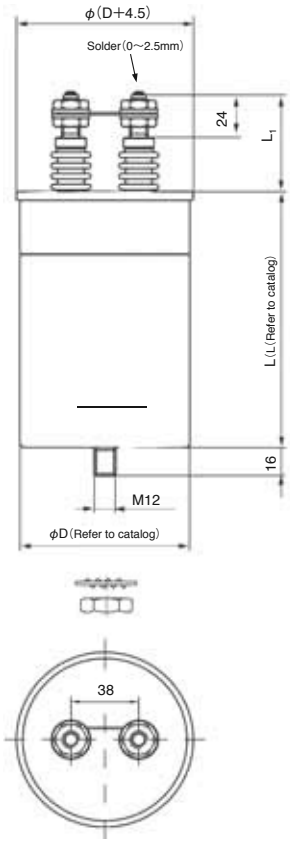

Table. Common Specification

Item		Specification
Terminal code		C6 / C68
Can material		Aluminum
Stud bolt		M12
Lid		Aluminum
Terminal	C6	M10 bolt terminal, Plastic bushing
		Torque : 9Nm
		I_{max} (terminal) : 100A
	C68	M8 bolt terminal, Plastic bushing
		Torque : 4Nm
		I_{max} (terminal) : 50A
Degree of protection		IP00
Humidity class		C

Table. Common Specification

Item	Specification
Terminal code	CR
Can material	Aluminum
Stud bolt	M12
Lid	Aluminum
Terminal	M10 bolt terminal, Celamic bushing
	Torque : 9Nm
	I_{max} (terminal) : 100A
Degree of protection	IP00
Humidity class	C

Table. Dimensions Unit : mm

D	L	Insulation distance	
		in Air	Creepage
60	41	19	23
65	41	19	23
75	41	15	25
85	41	15	25
95	41	15	25
100	41	15	25
116	37	15	25
136	36	15	25

Table. Dimensions Unit : mm

D	L	Insulation distance	
		in Air	Creepage
75	56	17	54
85	56	17	54
95	56	17	54
100	56	17	54
116	54	17	54
136	51	17	54

Dimensions（E62 series）

G1 terminal
（Can diameter : φ50/55/65mm）

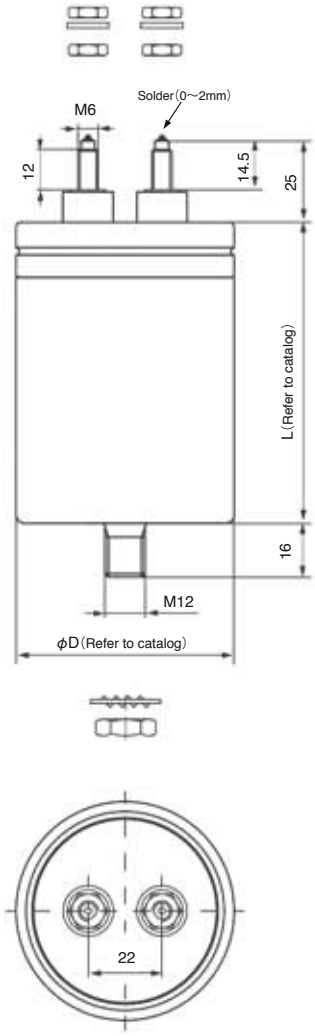

L1 terminal
（Can diameter : φ60 ～ 136mm）

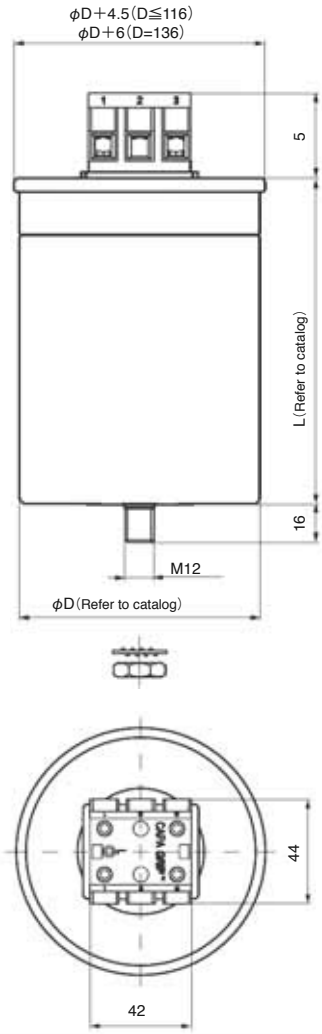

Table. Common Specification

Item	Specification
Terminal code	G1
Can material	Aluminum
Stud bolt	M12
Lid	Plastic, Rubber
Terminal	M6 bolt terminal, Plastic bushing
	Torque : 2Nm
	I_{max} (terminal) : 40A
Degree of protection	IP00
Humidity class	F

Table. Dimensions　　Unit : mm

D	Insulation distance	
	in Air	Creepage
50	10	15
55	10	16
65	10	21

Table. Common Specification

Item	Specification
Terminal code	L1
Can material	Aluminum
Stud bolt	M12
Lid	Aluminum
Terminal	Max wire size: max 25mm²
	Torque : 3Nm
	I_{max} (terminal) : 43A
	Clearance in air: 16mm
	Creepage distance: 16mm
Degree of protection	IP20
Humidity class	C

Dimensions（E62 series）

Z1/S2 terminal（Can diameter : φ60 ～ 136mm）
For one phase capacitors

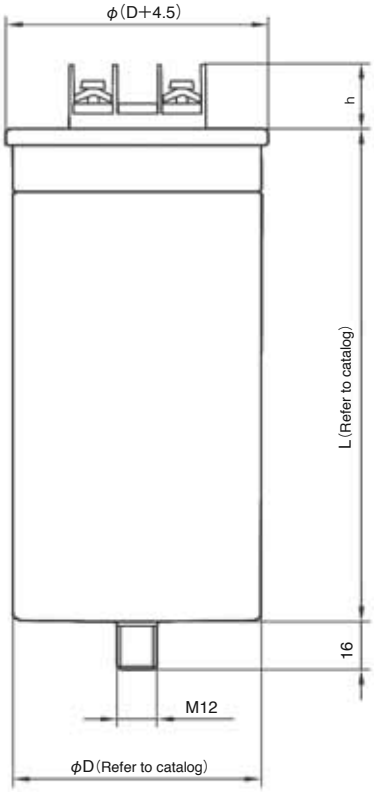

Z1

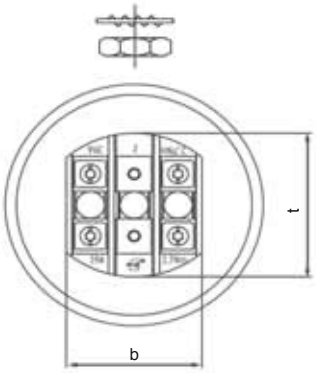

S2

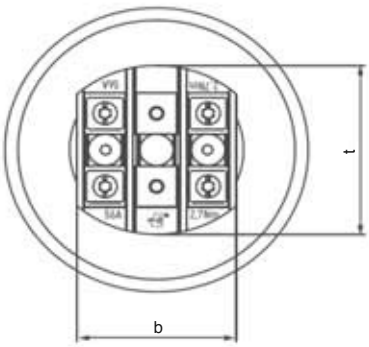

Table. Common Specification

Item		Specification
Terminal code		Z1 / S2
Can material		Aluminum
Stud bolt		M12
Lid		Aluminum
Terminal	Z1	Max wire size: max 10mm²
		Torque : 2.7Nm
		I_{max} (terminal) : 39A
		Clearance in air: 16mm
		Creepage distance: 16mm
	S2	Max wire size: max 16mm²
		Torque : 2.7Nm
		I_{max} (terminal) : 56A
		Clearance in air: 15mm
		Creepage distance: 14mm
Degree of protection		IP00
Humidity class		C

Table. Dimensions

Unit : mm

Item	Terminal	
	Z1	S2
h	22	18
b	41	47
t	43.5	53

NEW!

E62-TAB（AC） Series

（AC Cylindrical Metallized Polypropylene Film Capacitos）

Features

- Perfect for non-sinusoidal voltages and pulsed currents.
- Housed in a hermetically sealed aluminum can which is filled with environmentally friendly plant oil as standard.
- The integrated overpressure disconnector ensure safe operation and controlled disconnection in the event of overload or failure at the end of operating life.

Specifications

Item	Specification
Category temperature range	−40 ～ +70℃（+85℃/ Includes self temperature rise）
Storage temperature	−40 ～ +85℃
Rated voltage (U_N)	420 ～ 5,000Vac
Terminal (torque)	M8 × 10 (5Nm) / M12 × 16 (15Nm)
Standards	IEC 61071 : 2007
Dielectric	Polypropylene
Dielectric dissipation factor (tan δ_0)	2×10^{-4}
Capacitance tolerance	±10% (optional ±5%)
Safety devices	Overpressure disconnector
Impregnant	Liquid, based on vegetable oil, Non PCB
Material of case	Plastic (UL94V−0)
Environmental regulations	Comply with RoHS

Numbering system: e.g. E62, 420VAC, 15μ F, φ35×58Lmm, D1 terminal

E62 . D 58 - 153 D1 0 / H

- Auxiliary symbol
- Terminal symbol
- Capacitance
- Case length
- Case diameter symbol
- Series name

Standard Value and Case Size

Rated Capacitance C_N (μF)	Case size Diameter φD (mm)	Case size Length L (mm)	Rated DC voltage U_N (DC) (Vdc)	Max current (rms) I_{max} (Arms)	Max peak current $\hat{I}$ (kA)	Max surge current I_S (kA)	Rated energy contents W (J)	Series resistance (reference) R_S (mΩ)	Self inductance (reference) ESL (nH)	Thermal resistance (reference) R_{th} (K/W)	Terminal	Weight (kg)	Part number
Rated AC voltage U_N (AC) : 420Vac			U_{rms} : 300V U_S : 1,050V Test voltage (T-T) U_{TT} : 1,050Vdc Test voltage (T-C) U_{TC} : 3,000Vac										
15	35	58	700	16	0.3	0.9	1.3	3.1	60	21.9	D1	0.07	E62.D58-153D10/H
20	40	58	700	16	0.5	1.5	1.8	2.6	60	19.2	D1	0.08	E62.E58-203D10/H
22	35	81	700	10	0.3	0.9	1.9	5.4	80	15.7	E2	0.10	E62.D81-223E20/H
24	35	81	700	10	0.3	0.9	2.1	5.0	80	15.7	E2	0.10	E62.D81-243E20/H
24	35	81	700	10	0.30	0.90	2.1	5.7	80	15.7	D1	0.12	E62.D81-243D10/H
35	40	81	700	16	0.4	1.2	3.1	4.0	80	13.9	D1	0.1	E62.E81-353D10/H
50	45	81	700	16	0.6	1.7	4.4	3.3	80	12.2	D1	0.1	E62.F81-503D10/H
75	55	85	700	16	0.8	2.6	6.6	2.7	80	9.5	D1	0.2	E62.H85-753D10/H
80	55	85	700	16	0.9	2.7	7.1	4.7	80	9.5	D1	0.2	E62.H85-803D10/H
90	60	85	700	16	1.0	3.0	7.9	2.5	80	8.7	D1	0.25	E62.K85-903D10/H
220	65	160	700	16	1.2	3.6	19	4.5	130	4.3	D2	0.6	E62.L16-224D20/H
300	75	160	700	16	1.6	4.8	26	4.1	90	3.7	D2	0.7	E62.M16-304D20/H
Rated AC voltage U_N (AC) : 500Vac			U_{rms} : 360V U_S : 1,260V Test voltage (T-T) U_{TT} : 1,260Vdc Test voltage (T-C) U_{TC} : 3,000Vac										
1	25	48	840	6	0.1	0.3	0.1	18.6	60	37.1	E1	0.03	E62.B48-102E10/H
20	40	81	840	16	0.3	0.8	2.5	5.4	80	13.8	D1	0.11	E62.E81-203D10/H
25	40	81	840	16	0.4	1.1	3.1	4.3	80	13.8	D1	0.11	E62.E81-253D10/H
33	45	81	840	16	0.5	1.4	4.1	3.7	80	12.2	D1	0.14	E62.F81-333D10/H
50	55	85	840	16	0.7	2.1	6.3	3.0	80	9.5	D1	0.21	E62.H85-503D10/H
60	60	85	840	16	0.8	2.5	7.5	2.8	80	8.7	D1	0.25	E62.K85-603D10/H
160	65	160	840	16	1.0	3.0	20	4.2	100	4.3	D2	0.6	E62.L16-164D20/H
200	75	160	840	16	1.3	3.9	25	3.9	140	3.7	D2	0.7	E62.M16-204D20/H

Standard Value and Case Size

Rated Capacitance C_N 〔μF〕	Case size Diameter ϕD 〔mm〕	Case size Length L 〔mm〕	Rated DC voltage U_N (DC) 〔Vdc〕	Max current (rms) I_{max} 〔Arms〕	Max peak current $\hat{I}$ 〔kA〕	Max surge current I_S 〔kA〕	Rated energy contents W 〔J〕	Series resistance (reference) R_S 〔mΩ〕	Self inductance (reference) ESL 〔nH〕	Thermal resistance (reference) R_{th} 〔K/W〕	Terminal	Weight 〔kg〕	Part number
Rated AC voltage U_N (AC) : 640Vac			U_{rms} : 450V U_S : 1,500V Test voltage (T-T) U_{TT} : 1,500Vdc Test voltage (T-C) U_{TC} : 3,000Vac										
0.47	25	48	1,000	8	0.10	0.3	0.1	7.4	60	37.1	E1	0.04	E62.B48-471E10/H
4	30	58	1,000	10	0.2	0.6	0.8	5.9	60	25.6	E1	0.05	E62.C58-402E10/H
4.7	30	58	1,000	10	0.2	0.7	1.0	5.4	60	25.6	E1	0.05	E62.C58-472E10/H
5	30	58	1,000	10	0.3	0.8	1.0	4.9	60	25.6	E1	0.05	E62.C58-502E10/H
6	35	58	1,000	16	0.4	1.0	1.2	4.5	60	21.9	E2	0.07	E62.D58-602E20/H
6.8	35	58	1,000	16	0.4	1.0	1.4	4.1	60	21.9	E2	0.1	E62.D58-682E20/H
10	40	58	1,000	16	0.4	1.2	2.0	3.2	60	19.2	D1	0.1	E62.E58-103D10/H
15	40	81	1,000	16	0.2	0.7	3.1	5.5	80	13.8	D1	0.1	E62.E81-153D10/H
18	40	81	1,000	16	0.3	1	3.7	4.8	80	13.8	D1	0.1	E62.E81-183D10/H
22	45	81	1,000	16	0.4	1.1	4.5	4.3	80	12.2	D1	0.14	E62.F81-223D10/H
25	45	81	1,000	16	0.4	1.2	5.1	4.0	80	12.2	D1	0.1	E62.F81-253D10/H
40	55	85	1,000	16	0.6	1.9	8.2	3.4	80	9.5	D1	0.2	E62.H85-403D10/H
47	60	85	1,000	16	0.8	2.3	10	2.9	80	8.7	D1	0.25	E62.K85-473D10/H
50	60	98	1,000	16	0.6	1.9	10	3.9	120	7.6	D1	0.4	E62.K98-503D10/H
60	60	98	1,000	16	1.0	3.0	12	3.2	120	7.6	D1	0.4	E62.K98-603D10/H
100	60	148	1,000	16	0.8	2.4	20	5.1	120	5.0	D1	0.45	E62.K14-104D10/H
120	65	160	1,000	16	0.9	2.7	25	5.0	130	4.3	D2	0.6	E62.L16-124D20/H
150	75	160	1,000	16	1.1	3.3	31	4.6	110	3.7	D2	0.7	E62.M16-154D20/H
Rated AC voltage U_N (AC) : 680Vac			U_{rms} : 480V U_S : 1,680V Test voltage (T-T) U_{TT} : 1,680Vdc Test voltage (T-C) U_{TC} : 3,000Vac										
3.3	30	58	1,120	15	0.2	0.5	0.8	6.5	60	25.6	E1	0.05	E62.C58-332E10/H
12	40	81	1,120	16	0.2	0.7	2.8	5.8	80	13.8	D1	0.11	E62.E81-123D10/H
15	40	81	1,120	16	0.3	0.8	3.5	5.4	80	13.8	D1	0.11	E62.E81-153D10/H
20	45	81	1,120	16	0.4	1.1	4.6	4.2	80	12.2	D1	0.14	E62.F81-203D10/H
30	55	85	1,120	16	0.5	1.6	6.9	3.3	80	9.5	D1	0.21	E62.H85-303D10/H
33	60	85	1,120	16	0.6	1.8	7.6	3.2	80	8.7	D1	0.3	E62.K85-333D10/H
40	65	95	1,120	16	0.7	2.1	9.2	3.3	120	7.2	D2	0.3	E62.L95-403D20/H
50	55	124	1,120	16	0.5	1.6	12	5.2	100	6.5	D1	0.3	E62.H12-503D10/H
50	65	109	1,120	16	0.7	2.2	12	3.7	120	6.3	D2	0.4	E62.L10-503D20/H
60	60	124	1,120	16	0.6	1.9	14	5.0	140	6.0	D1	0.4	E62.K12-603D10/H
70	60	148	1,120	16	0.6	1.9	16	6.0	140	5.0	D1	0.5	E62.K14-703D10/H
90	65	160	1,120	16	0.8	2.4	21	4.8	110	4.3	D2	0.6	E62.L16-903D20/H
100	75	160	1,120	16	0.9	2.6	23	5.1	100	3.7	D2	0.7	E62.M16-104D20/H
Rated AC voltage U_N (AC) : 750Vac			U_{rms} : 530V U_S : 1,900V Test voltage (T-T) U_{TT} : 1,890Vdc Test voltage (T-C) U_{TC} : 3,000Vac										
4.7	30	81	1,200	10	0.2	0.7	1.3	11.1	60	18.3	E1	0.07	E62.C81-472E10/H
6.8	40	85	1,200	16	0.2	0.6	1.9	3.8	60	19.2	D1	0.08	E62.E58-682D10/H
10	40	81	1,200	16	0.5	1.4	2.8	6.1	110	13.8	D1	0.11	E62.E81-103D10/H
10	50	62	1,200	16	0.4	1.2	2.8	3.0	100	14.4	D1	0.14	E62.G62-103D10/H
15	45	85	1,200	16	0.3	0.9	4.2	5.9	110	11.6	B2	0.1	E62.F85-153B20/H
16	50	85	1,200	16	0.3	1.0	4.5	5.1	80	10.5	D1	0.18	E62.G85-163D10/H
22	60	85	1,200	16	0.5	1.5	6.2	3.5	120	8.7	D1	0.3	E62.K85-223D10/H
26	60	85	1,200	16	0.5	1.5	7.3	3.4	120	8.7	D1	0.3	E62.K85-263D10/H
29	60	85	1,200	16	0.6	1.8	8.2	3.2	120	8.7	D1	0.3	E62.K85-293D10/H
33	50	148	1,200	16	0.4	1.0	9.3	11.4	120	6.0	D1	0.3	E62.G14-333D10/H
70	65	160	1,200	16	0.7	2.0	20	5.6	140	4.3	D2	0.6	E62.L16-703D20/H
80	75	160	1,200	20	0.8	2.3	23	5.3	130	3.7	D2	0.7	E62.M16-803D20/H
Rated AC voltage U_N (AC) : 850Vac			U_{rms} : 600V U_S : 2,100V Test voltage (T-T) U_{TT} : 2,100Vdc Test voltage (T-C) U_{TC} : 3,000Vac										
2	30	58	1,200	10	0.2	0.5	0.7	8.1	60	25.6	E1	0.05	E62.C58-202E10/H
2	30	58	1,400	10	0.2	0.5	0.7	8.1	60	25.6	E4	0.07	E62.C58-202E40/H
2.2	30	58	1,200	10	0.2	0.6	0.8	7.5	60	25.6	E1	0.05	E62.C58-222E10/H
2.2	30	58	1,400	10	0.2	0.6	0.8	7.5	60	25.6	E4	0.07	E62.C58-222E40/H
3.3	30	81	1,200	10	0.1	0.3	1.2	13.8	80	18.3	E1	0.07	E62.C81-332E10/H
3.3	35	58	1,200	16	0.1	0.4	1.2	5.6	60	21.9	D1	0.07	E62.D58-332D10/H
4	30	81	1,200	10	0.2	0.5	1.4	11.7	80	18.3	E1	0.1	E62.C81-402E10/H
4	30	81	1,400	10	0.2	0.5	1.4	11.7	80	18.3	E4	0.1	E62.C81-402E40/H
12	45	85	1,400	16	0.3	0.8	4.3	6.2	110	12	B2	0.1	E62.F85-123B20/H
15	50	85	1,200	16	0.3	1.0	5.4	4.3	80	10	D1	0.18	E62.G85-153D10/H
25	65	95	1,200	16	0.6	1.7	9.0	3.6	120	7.0	D2	0.3	E62.L95-253D20/H
55	65	160	1,200	16	0.6	1.8	20	6.0	130	4.3	D2	0.6	E62.L16-553D20/H
68	75	160	1,200	16	0.7	2.2	25	5.4	100	3.7	D2	0.7	E62.M16-683D20/H

Standard Value and Case Size

Rated Capacitance C_N [μF]	Case size Diameter ϕD [mm]	Case size Length L [mm]	Rated DC voltage U_N (DC) [Vdc]	Max current (rms) I_{max} [Arms]	Max peak current $\hat{I}$ [kA]	Max surge current I_S [kA]	Rated energy contents W [J]	Series resistance (reference) R_S [mΩ]	Self inductance (reference) ESL [nH]	Thermal resistance (reference) R_{th} [K/W]	Terminal	Weight [kg]	Part number
Rated AC voltage U_N (AC) : 1,000Vac			U_{rms} : 720V U_S : 2,500V Test voltage (T-T) U_{TT} : 2,520Vdc Test voltage (T-C) U_{TC} : 3,500Vac										
1.5	30	58	1,200	10	0.3	0.9	0.8	5.0	60	25.6	E1	0.1	E62.C58-152E10/H
1.5	30	58	1,680	10	0.3	0.9	0.8	5.0	60	25.6	E4	0.1	E62.C58-152E40/H
2.2	35	58	1,200	16	0.3	0.8	1.1	3.8	60	21.9	E2	0.1	E62.D58-222E20/H
3	30	81	1,200	10	0.4	1.1	1.5	7.2	80	18.3	E1	0.1	E62.C81-302E10/H
3	30	81	1,680	10	0.4	1.1	1.5	7.2	80	18.3	E4	0.1	E62.C81-302E40/H
4	35	81	1,200	10	0.5	1.4	2.0	5.8	80	15.7	E2	0.1	E62.D81-402E20/H
5	40	81	1,200	16	0.6	1.8	2.5	5.0	80	14.0	D1	0.1	E62.E81-502D10/H
6.8	45	81	1,200	16	0.8	2.4	3.4	4.1	80	12.2	D1	0.1	E62.F81-682D10/H
8	45	81	1,200	16	0.5	1.4	4.0	3.7	80	12.2	D1	0.1	E62.F81-802D10/H
8	45	85	1,680	16	0.5	1.4	4.0	5.0	110	11.6	B2	0.1	E62.F85-802B20/H
15	60	85	1,200	16	0.9	2.6	7.5	2.7	110	8.7	D1	0.3	E62.K85-153D10/H
20	65	95	1,200	16	1.7	5.1	10	2.8	120	7.2	D2	0.3	E62.L95-203D20/H
38	65	160	1,200	20	1.0	3.0	19	4.8	140	4.3	D2	0.6	E62.L16-383D20/H
53	75	160	1,200	20	1.4	4.2	27	4.3	130	3.7	D2	0.7	E62.M16-533D20/H
Rated AC voltage U_N (AC) : 1,200Vac			U_{rms} : 850V U_S : 3,000V Test voltage (T-T) U_{TT} : 3,000Vdc Test voltage (T-C) U_{TC} : 4,000Vac										
0.1	25	58	1,200	8	0.1	0.3	0.07	15.0	60	30.7	E1	0.1	E62.B58-101E10/H
0.1	30	58	1,200	8	0.1	0.3	0.07	12.7	60	25.6	E1	0.1	E62.C58-101E10/H
0.15	30	58	1,200	8	0.1	0.3	0.11	10.4	60	25.6	E1	0.1	E62.C58-151E10/H
0.22	30	58	1,200	10	0.2	0.6	0.16	7.5	60	25.6	E1	0.1	E62.C58-221E10/H
0.33	30	58	1,200	10	0.2	0.6	0.24	6.5	60	25.6	E1	0.1	E62.C58-331E10/H
0.47	30	58	1,200	10	0.2	0.6	0.34	8.2	60	25.6	E1	0.1	E62.C58-471E10/H
0.5	30	58	1,200	10	0.2	0.5	0.36	5.9	60	25.6	E1	0.1	E62.C58-501E10/H
0.5	30	58	2,000	10	0.2	0.5	0.36	5.9	60	25.6	E4	0.1	E62.C58-501E40/H
0.68	30	58	1,200	10	0.2	0.7	0.49	6.6	60	25.6	E1	0.1	E62.C58-681E10/H
1	30	58	1,200	10	0.3	0.8	0.72	6.0	60	25.6	E1	0.1	E62.C58-102E10/H
1	30	58	2,000	10	0.3	0.8	0.72	6.0	60	25.6	E4	0.1	E62.C58-102E40/H
1.2	30	58	1,200	10	0.3	0.8	0.86	5.6	60	25.6	E1	0.1	E62.C58-122E10/H
1.5	30	81	1,200	10	0.2	0.7	1.1	9.9	60	18.3	E1	0.1	E62.C81-152E10/H
2	30	81	1,200	10	0.3	0.8	1.4	8.7	60	18.3	E1	0.1	E62.C81-202E10/H
2	30	81	2,000	10	0.3	0.8	1.4	8.7	60	18.3	E4	0.1	E62.C81-202E40/H
2.2	30	93	1,200	10	0.2	0.6	1.6	11.1	90	16.0	E1	0.1	E62.C93-222E10/H
2.2	30	93	2,000	10	0.2	0.6	1.6	11.1	90	16.0	E4	0.1	E62.C93-222E40/H
3.3	50	62	2,000	16	0.8	2.4	2.4	4.0	80	14.4	B2	0.2	E62.G62-332B20/H
4	40	81	1,200	16	0.3	0.9	2.9	5.2	80	13.8	D1	0.1	E62.E81-402D10/H
4.7	40	81	1,200	16	0.4	1.3	3.4	4.7	60	13.8	D1	0.1	E62.E81-472D10/H
5	45	81	1,200	16	0.4	1.1	3.6	4.5	80	12.2	D1	0.1	E62.F81-502D10/H
5.75	50	85	1,200	16	0.5	1.5	4.1	3.8	80	10.5	D1	0.2	E62.G85-582D10/H
6.8	50	85	1,200	16	0.5	1.5	4.9	3.7	80	10.5	D1	0.2	E62.G85-682D10/H
10	60	85	1,200	16	0.7	2.1	7.2	3.1	80	8.7	D1	0.3	E62.K85-103D10/H
15	55	124	1,200	16	0.6	1.8	11	4.7	100	6.5	D1	0.3	E62.H12-153D10/H
22	60	151	1,200	16	1.2	3.6	16	5.4	100	4.9	D1	0.4	E62.K15-223D10/H
30	65	160	1,200	16	1.0	3.0	22	4.5	130	4.3	D2	0.6	E62.L16-303D20/H
33	75	160	1,200	16	0.9	2.8	24	4.8	120	3.7	D2	0.7	E62.M16-333D20/H
40	75	160	1,200	16	1.2	3.6	29	4.5	130	3.7	D2	0.7	E62.M16-403D20/H
Rated AC voltage U_N (AC) : 1,350Vac			U_{rms} : 960V U_S : 3,300V Test voltage (T-T) U_{TT} : 3,375Vdc Test voltage (T-C) U_{TC} : 4,200Vac										
1.5	30	81	2,250	10	0.2	0.7	1.37	9.9	80	18.3	E4	0.09	E62.C81-152E40/H
4	45	85	2,250	16	0.3	1.0	3.6	6.0	130	11.6	B2	0.14	E62.F85-402B20/H
Rated AC voltage U_N (AC) : 1,700Vac			U_{rms} : 1,200V U_S : 4,200V Test voltage (T-T) U_{TT} : 4,200Vdc Test voltage (T-C) U_{TC} : 5,000Vac										
0.33	30	58	2,800	10	0.2	0.6	0.48	6.5	60	25.6	E4	0.1	E62.C58-331E40/H
0.47	30	58	2,800	10	0.2	0.6	0.68	8.2	60	25.6	E4	0.1	E62.C58-471E40/H
0.68	30	81	2,800	10	0.2	0.6	0.98	16.1	80	18.3	E4	0.1	E62.C81-681E40/H
1	30	81	2,800	10	0.2	0.6	1.4	11.5	80	18.3	E4	0.1	E62.C81-102E40/H
1	45	62	2,800	16	0.4	1.2	1.4	5.8	150	16.0	B2	0.1	E62.F62-102B20/H
1.5	45	85	2,800	16	0.5	1.5	2.2	6.4	120	11.6	B2	0.1	E62.F85-152B20/H
2.2	45	85	2,800	10	0.2	0.6	3.2	7.3	80	11.6	B2	0.1	E62.F85-222B20/H
2.5	45	85	2,800	16	0.2	0.7	3.6	6.8	120	11.6	B2	0.1	E62.F85-252B20/H
3.3	50	85	2,800	16	0.3	1.0	4.8	5.9	120	10.5	B2	0.2	E62.G85-332B20/H
4.7	55	85	2,800	16	0.5	1.4	6.8	5.0	120	9.5	B2	0.2	E62.H85-472B20/H
8.2	55	151	2,800	16	0.4	1.1	12	8.9	190	5.4	B2	0.4	E62.H15-822B20/H
Rated AC voltage U_N (AC) : 2,100Vac			U_{rms} : 1,500V U_S : 5,400V Test voltage (T-T) U_{TT} : 5,400Vdc Test voltage (T-C) U_{TC} : 6,200Vac										
0.1	30	58	3,600	9	0.1	0.3	0.22	12.7	60	25.6	E4	0.1	E62.C58-101E40/H
0.15	30	58	3,600	9	0.1	0.3	0.33	10.4	60	25.6	E4	0.1	E62.C58-151E40/H
0.22	30	58	3,600	10	0.2	0.6	0.49	7.5	60	25.6	E4	0.1	E62.C58-221E40/H
0.22	45	62	3,600	16	0.2	0.5	0.49	6.8	100	16.0	B2	0.1	E62.F62-221B20/H
0.47	45	62	3,600	16	0.4	1.2	1.04	5.7	100	16.0	B2	0.1	E62.F62-471B21/H
0.68	50	62	3,600	16	0.5	1.5	1.5	4.7	100	14.4	B2	0.2	E62.G62-681B20/H
1	45	105	3,600	16	0.8	2.4	2.2	7.4	140	9.4	B2	0.2	E62.F10-102B21/H
1.5	55	105	3,600	16	1.2	3.6	3.3	5.7	120	7.7	B2	0.3	E62.H10-152B20/H
2	45	105	3,500	16	0.8	2.3	4.4	5.9	120	9.4	B2	0.2	E62.F10-202B20/H

Standard Value and Case Size

Rated Capacitance C_N 〔μF〕	Case size Diameter ϕD 〔mm〕	Case size Length L 〔mm〕	Rated DC voltage U_N (DC) 〔Vdc〕	Max current (rms) I_{max} 〔Arms〕	Max peak current $\hat{I}$ 〔kA〕	Max surge current I_S 〔kA〕	Rated energy contents W 〔J〕	Series resistance (reference) R_S 〔mΩ〕	Self inductance (reference) ESL 〔nH〕	Thermal resistance (reference) R_{th} 〔K/W〕	Terminal	Weight 〔kg〕	Part number
Rated AC voltage U_N (AC) : 2,400Vac			**U_{rms} : 1,700V U_S : 6,000V Test voltage (T-T) U_{TT} : 6,000Vdc Test voltage (T-C) U_{TC} : 6,800Vac**										
2	50	105	4,000	16	0.5	1.5	5.8	5.6	120	8.5	B2	0.2	E62.G10-202B20/H
2.2	55	105	4,000	16	0.5	1.5	6.3	5.0	120	7.4	B2	0.3	E62.H10-222B20/H
4	55	151	4,000	16	0.6	1.8	12	7.5	190	5.4	B2	0.4	E62.H15-402B20/H
Rated AC voltage U_N (AC) : 4,000Vac			**U_{rms} : 2,800V U_S : 7,500V Test voltage (T-T) U_{TT} : 7,500Vdc Test voltage (T-C) U_{TC} : 8,200Vac**										
0.1	45	81	5,000	16	0.4	1.2	0.80	9.6	100	12.2	B2	0.1	E62.F81-101B20/H
0.15	45	81	5,000	16	0.5	1.5	1.2	7.0	90	12.2	B2	0.1	E62.F81-151B20/H
0.22	45	105	5,000	16	0.4	1.3	1.8	14.5	140	9.4	B2	0.2	E62.F10-221B21/H
0.22	60	105	5,000	16	0.7	2.1	1.8	6.9	140	7.1	CD	0.3	E62.K10-221CD0/H
0.33	45	105	5,000	16	0.3	0.9	2.6	14.0	140	9.4	B2	0.2	E62.F10-331B20/H
0.39	45	105	5,000	16	0.3	0.9	3.1	12.3	140	9.4	B2	0.2	E62.F10-391B20/H
0.47	45	105	5,000	16	0.4	1.1	3.8	10.8	140	9.4	B2	0.2	E62.F10-471B20/H
0.5	45	105	5,000	16	0.5	1.5	4.0	10.4	140	9.4	B2	0.2	E62.F10-501B20/H
0.68	55	105	5,000	16	0.5	1.5	5.4	8.5	120	7.7	B2	0.3	E62.H10-681B20/H
1.5	75	140	4,000	16	1.4	4.2	12	5.2	140	4.2	CD	0.6	E62.M14-152CD0/H
2	85	140	4,000	16	1.4	4.2	16	5.1	140	3.7	CD	0.80	E62.N14-202CD0/H
Rated AC voltage U_N (AC) : 5,000Vac			**U_{rms} : 3,500V U_S : 7,500V Test voltage (T-T) U_{TT} : 8,750Vdc**										
0.1	45	105	5,000	16	0.4	1.1	1.25	14.9	140	9.4	B2	0.2	E62.F10-101B20/H
0.15	45	105	5,000	16	0.4	1.4	1.9	12.9	140	9.4	B2	0.2	E62.F10-151B20/H
0.22	45	105	5,000	16	0.4	1.4	2.8	14.5	140	9.4	B2	0.2	E62.F10-221B20/H
0.33	60	120	5,000	16	0.7	2.2	4.1	8.7	140	6.2	CD	0.3	E62.K12-331CD0/H
0.47	60	120	5,000	16	0.9	2.8	5.9	7.1	140	6.2	CD	0.3	E62.K12-471CD0/H
0.68	60	140	5,000	16	0.9	2.8	8.5	8.9	140	5.3	CD	0.4	E62.K14-681CD0/H
1	75	140	5,000	16	1.4	4.2	13	6.5	140	4.2	CD	0.6	E62.M14-102CD0/H
1.5	85	140	5,000	16	2.1	6.2	19	4.8	140	3.7	CD	0.8	E62.N14-152CD0/H
2	95	140	5,000	16	2.8	8.3	25	3.9	140	3.4	CD	1.0	E62.P14-202CD0/H

Dimensions（E62-TAB series）

B2 terminal
（Can diameter : φ45 ～ 55mm）

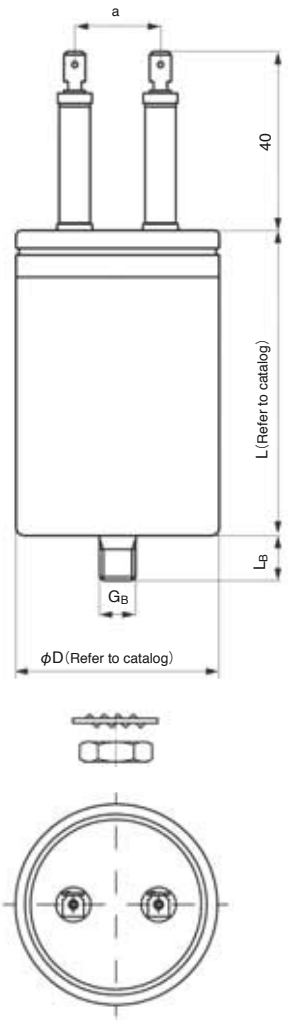

CD terminal
（Can diameter : φ60 ～ 95mm）

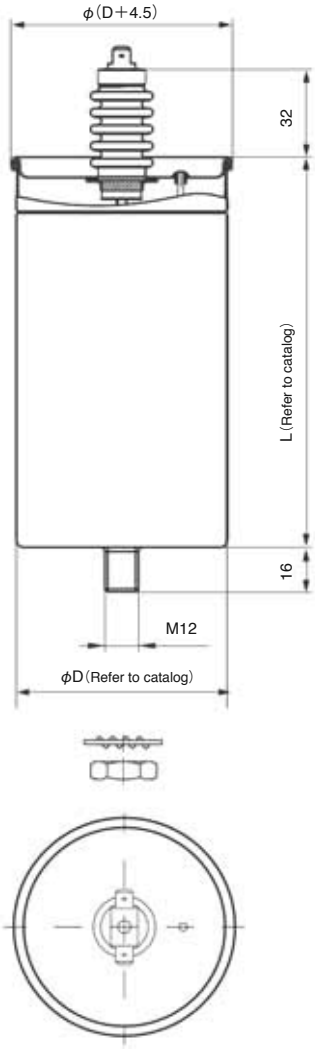

Table. Common Specification

Item	Specification
Terminal code	B2
Can material	Aluminium
Stud bolt	M8 / M12
Lid	Brass with rubber sealing
Terminal	Single tab connector, ceramic bushing
	I_{max} (terminal) : 16A
Degree of protection	IP00
Humidity class	F

Table. Dimensions

Unit : mm

D	L_B	G_B	a	Clearance	
				in Air	Creepage
45	10	M8	19	9	20
50	16	M12	26	16	20
55	16	M12	26	16	20

Table. Common Specification

Item	Specification
Terminal code	CD
Can material	Aluminium
Stud bolt	M12
Lid	Copper
Terminal	Dual tab terminal
	I_{max} (terminal) : 16A
	Clearance in air : 35mm
	Creepage distance : 54mm
Degree of protection	IP00
Humidity class	C

Dimensions（E62-TAB series）

D1 terminal
（Can diameter : φ35 ～ 60mm）

D2 terminal
（Can diameter : φ65 ～ 75mm）

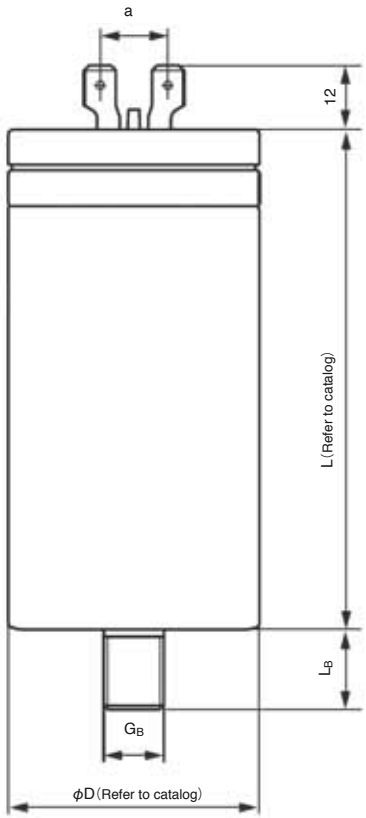

Table. Common Specification

Item	Specification
Terminal code	D1 / D2
Can material	Aluminium
Stud bolt	M8 / M12
Lid	Plastic with rubber sealing
Terminal	Dual tab connectors
	I_{max} (terminal) : 16A
Degree of protection	IP00
Humidity class	F

Table. Dimensions

Unit : mm

D	L_B	G_B	a	Clearance	
				in Air	Creepage
35	10	M8	13.5	6.5	6.5
40	10	M8	13.5	6.5	9
45	10	M8	13.5	6.5	10
50	16	M12	13.5	6.5	10
55	16	M12	13.5	6.5	10
60	16	M12	13.5	6.5	10
65	16	M12	16.5	8	10
75	16	M12	16.5	8	10

D1

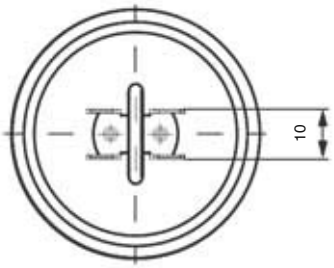

D2

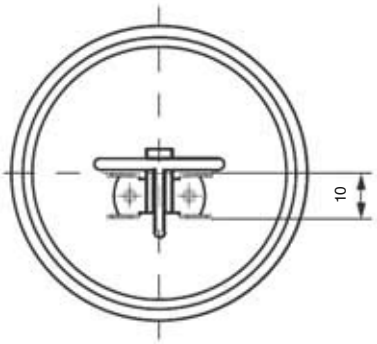

Dimensions（E62-TAB series）

E1 terminal
（Can diameter : φ25 ～ 30mm）

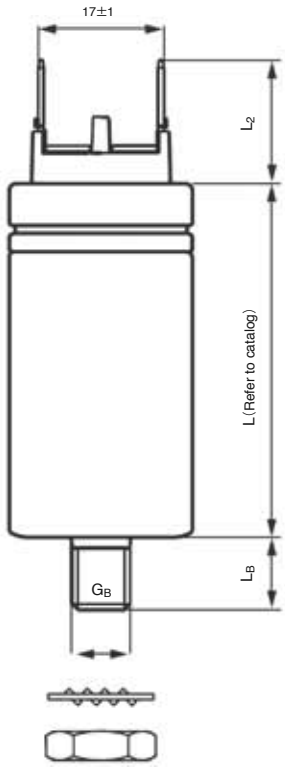

E2 terminal
（Can diameter : φ35 ～ 65mm）

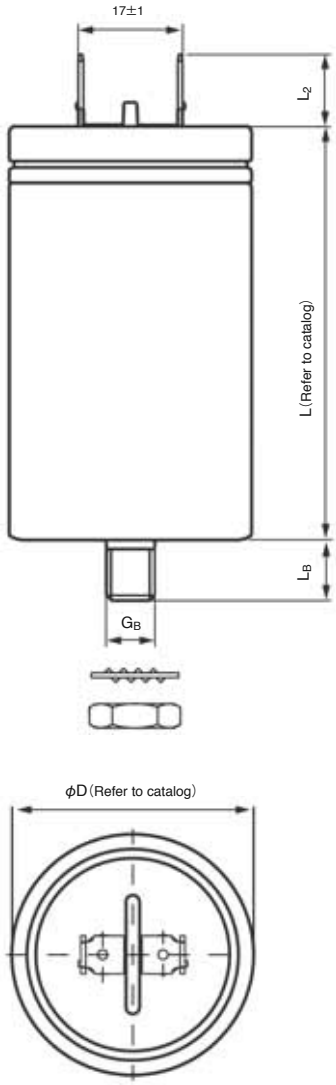

Table. Common Specification

Item	Specification
Terminal code	E1 / E2
Can material	Aluminium
Stud bolt	M8 / M12
Lid	Plastic
Terminal	Tab connector (6.3×0.8mm)
	I_{max} (terminal) : 16A
Degree of protection	IP00
Humidity class	F

Table. Dimensions

Unit : mm

D	L_2	L_B	G_B	Clearance	
				in Air	Creepage
25	16	10	M8	7.5	7.5
30	15	10	M8	7.5	9
35 ～ 45	11	10	M8	7.5	9
50 ～ 65	11	16	M12	7.5	9

Dimensions（E62-TAB series）

E4 terminal
（Can diameter：φ25 ～ 30mm）

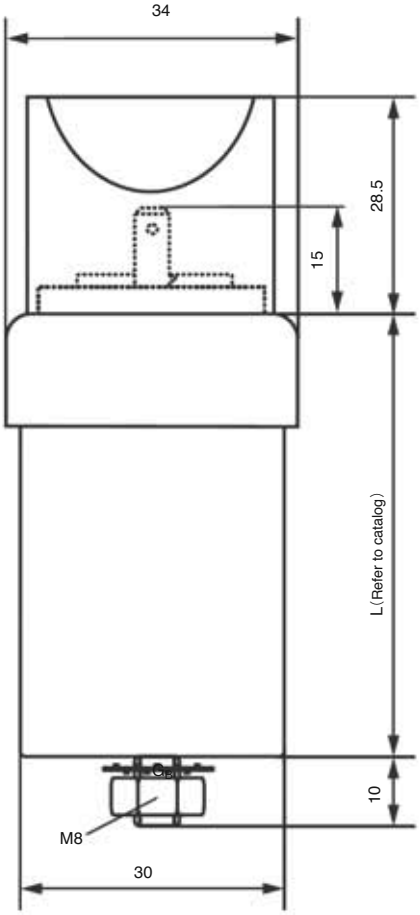

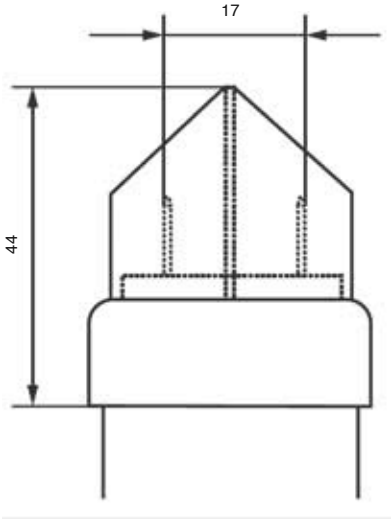

Table. Common Specification

Item	Specification
Terminal code	E4
Can material	Aluminium
Stud bolt	M8
Lid	Plastic with rubber sealing
Terminal	Tab connector (6.3×0.8mm)
	I_{max} (terminal) : 16A
Degree of protection	IP00
Humidity class	F

UPGRADE!

E62-3HF（AC） Series

(Three Phase Type Cylindrical Metallized Polypropylene Film Capacitors)

Features

- The three capacitor elements are connected in delta internally.
- Designed especially for heavy duty operation in extreme or sophisticated operating conditions.
- The integrated overpressure disconnector ensure safe operation and controlled disconnection in the event of overload or failure at the end of operating life.

Specifications

Item	Specification
Category temperature range	−50 ～ +70℃（+85℃ / Includes self temperature rise）
Storage temperature	−50 ～ +85℃
Rated voltage (U_N)	640 ～ 1,400Vac
Stud bolt (torque)	M12 × 16 / 18 (15 ±1Nm)
Standards	IEC 61071 : 2007
Dielectric	Polypropylene
Dielectric dissipation factor (tan δ_0)	2×10^{-4}
Capacitance tolerance	±5%
Safety devices	Overpressure disconnector
Impregnant	Castor oil, Non PCB
Material of case	Aluminum
Environmental regulations	Comply with RoHS

Numbering system: e.g. E62-3HF, 640VAC, 3×33μ F, φ75×164Lmm, Z3 terminal

E62 . M 16 - 333 Z3 0 / H

- 0 — Auxiliary symbol
- Z3 — Terminal symbol
- 333 — Capacitance
- 16 — Case length
- M — Case diameter symbol
- E62 — Series name

Standard Value and Case Size

Rated Capacitance C_N (μF)	Case size Diameter φD (mm)	Case size Length L (mm)	Max current (rms) I_{max} (Arms)	Max peak current $\hat{I}$ (kA)	Max surge current I_S (kA)	Rated energy contents W (J)	Series resistance (reference) R_S (mΩ)	Self inductance (reference) ESL (nH)	Thermal resistance (reference) R_{th} (K/W)	Terminal	Weight (kg)	Part number
Rated AC voltage U_N (AC) : 640Vac			U_{rms} : 450V U_S : 1,350V Test voltage (T-T) U_{TT} : 1,060Vdc Test voltage (T-C) U_{TC} : 3,600Vac									
3×33	75	164	3×39	0.9	2.7	20.3	3×0.9	110	4.7	Z3	0.8	E62.M16-333Z30/H
3×40	75	164	3×39	1.1	3.3	24.6	3×0.9	110	4.7	Z3	0.8	E62.M16-403Z30/H
3×46	85	164	3×56	1.3	3.9	28.3	3×0.7	120	4.1	S4	1.0	E62.N16-463S40/H
3×51	85	164	3×56	1.4	4.2	31.3	3×0.7	120	4.1	S4	1.0	E62.N16-513S40/H
3×68	95	164	3×56	1.9	5.7	41.8	3×0.55	120	3.5	S4	1.5	E62.P16-683S40/H
3×80	95	196	3×56	1.8	5.4	49.2	3×0.7	130	3.1	S4	1.5	E62.P19-803S40/H
3×100	116	164	3×56	3	9	61.5	3×0.4	100	3	S4	2.1	E62.R16-104S40/H
3×100	116	164	3×80	3	9	61.5	3×0.4	100	2.1	MB	2.1	E62.R16-104MB0/H
3×135	116	230	3×80	2.5	7.5	82.9	3×0.55	120	2.1	MB	2.5	E62.R23-134MB0/H
3×140	116	230	3×56	2.5	7.5	86.1	3×0.7	120	2.4	S4	2.6	E62.R23-144S40/H
3×200	136	245	3×80	3.4	10.2	122.9	3×0.55	120	1.7	MB	3.6	E62.S23-204MB0/H
Rated AC voltage U_N (AC) : 750Vac			U_{rms} : 530V U_S : 1,600V Test voltage (T-T) U_{TT} : 1,250Vdc Test voltage (T-C) U_{TC} : 3,600Vac									
3×16	65	164	3×39	0.6	1.8	13.5	3×1.1	100	5.4	Z3	0.6	E62.L16-163Z30/H
3×23	75	164	3×39	0.85	2.5	19.4	3×1.0	110	4.7	Z3	0.8	E62.M16-233Z30/H
3×30	85	164	3×56	1.1	3.3	25.3	3×0.7	120	4.1	S4	1.0	E62.N16-303S40/H
3×38.4	95	164	3×56	1.4	4.2	32.4	3×0.6	125	3.7	S4	1.2	E62.P16-383S40/H
3×48	100	164	3×56	1.4	4.2	40.4	3×0.7	130	3.1	S4	1.5	E62.Q16-483S40/H
3×75	116	196	3×56	2.1	6.3	63.3	3×0.6	130	2.5	S4	2.2	E62.R19-753S40/H
3×100	116	230	3×56	2.1	6.3	84.4	3×0.7	120	2.4	S4	2.6	E62.R23-104S40/H
3×100	116	230	3×80	2.2	6.6	84.4	3×0.6	120	2.1	MB	2.5	E62.R23-104MB0/H

Standard Value and Case Size

Rated Capacitance C_N 〔μF〕	Case size Diameter ϕD 〔mm〕	Case size Length L 〔mm〕	Max current (rms) I_{max} 〔Arms〕	Max peak current $\hat{I}$ 〔kA〕	Max surge current I_S 〔kA〕	Rated energy contents W 〔J〕	Series resistance (reference) R_S 〔mΩ〕	Self inductance (reference) ESL 〔nH〕	Thermal resistance (reference) R_{th} 〔K/W〕	Terminal	Weight 〔kg〕	Part number
Rated AC voltage U_N (AC) : 850Vac			**U_{rms} : 600V U_S : 1,830V Test voltage (T-T) U_{TT} : 1,420Vdc Test voltage (T-C) U_{TC} : 4,800Vac**									
3×9.0	60	164	3×39	0.8	2.4	9.8	3×1.0	100	5.8	Z3	0.5	E62.K16-902Z30/H
3×11	65	164	3×39	1.0	3.0	11.9	3×0.9	100	5.4	Z3	0.6	E62.L16-113Z30/H
3×12	65	164	3×39	1.1	3.3	13.0	3×0.9	100	5.4	Z3	0.6	E62.L16-123Z30/H
3×14	75	164	3×39	1.2	3.6	15.2	3×0.8	120	4.7	Z3	0.8	E62.M16-143Z30/H
3×19	85	164	3×56	1.6	4.8	20.6	3×0.75	120	4.1	S4	1	E62.N16-193S40/H
3×25	95	164	3×56	2.2	6.6	27.1	3×0.6	120	3.7	S4	1.2	E62.P16-253S40/H
3×30	100	164	3×56	2.6	7.8	32.5	3×0.5	120	3.5	S4	1.5	E62.Q16-303S40/H
3×37.5	100	196	3×56	2.4	7.2	40.6	3×0.55	130	2.9	S4	1.6	E62.Q19-373S40/H
3×50	116	196	3×56	3.4	10.2	54.2	3×0.5	130	2.5	S4	2.2	E62.R19-503S40/H
3×72.5	116	230	3×56	3.6	10.8	78.6	3×0.65	120	2.5	S4	2.6	E62.R23-723S40/H
3×86	136	196	3×80	2.8	4.4	93.2	3×0.5	100	2.1	MB	2.8	E62.S19-863MB0/H
Rated AC voltage U_N (AC) : 1,080Vac			**U_{rms} : 760V U_S : 2,320V Test voltage (T-T) U_{TT} : 1,800Vdc Test voltage (T-C) U_{TC} : 4,800Vac**									
3×11	75	164	3×39	1.2	3.6	19.2	3×1.0	110	4.7	Z3	0.8	E62.M16-113Z30/H
3×18.4	95	164	3×56	2.0	6.0	32.4	3×0.6	125	3.7	S4	1.2	E62.P16-183S40/H
3×22	95	196	3×56	2.0	6.0	38.5	3×0.7	130	3.1	S4	1.5	E62.P19-223S40/H
3×27.6	116	164	3×56	3.1	9.3	48.3	3×0.4	120	3.5	S4	2.1	E62.R16-283S40/H
3×33.4	95	230	3×56	2.1	6.3	63.6	3×0.6	130	2.5	S4	2.2	E62.P23-333S40/H
3×49	116	230	3×56	3.2	9.6	85.7	3×0.55	120	2.1	S4	2.5	E62.R23-493S40/H
3×55.7	136	196	3×56	5.0	15.0	97.5	3×0.4	130	2.1	S4	2.8	E62.S19-563S40/H
3×55.7	136	196	3×80	5.0	15.0	97.5	3×0.4	130	2.1	MB	2.8	E62.S19-563MB0/H
3×75	136	230	3×80	4.5	13.5	131.2	3×0.5	130	1.8	MB	3.4	E62.S23-753MB0/H
Rated AC voltage U_N (AC) : 1,130Vac			**U_{rms} : 800V U_S : 2,430V Test voltage (T-T) U_{TT} : 1,890Vdc Test voltage (T-C) U_{TC} : 4,800Vac**									
3×24.9	100	196	3×56	1.7	5.1	47.7	3×0.6	130	2.6	S4	1.8	E62.Q19-253S40/H
3×33.2	116	196	3×56	2.9	8.7	63.6	3×0.6	130	2.5	S4	2.2	E62.R19-333S40/H
3×41.4	136	196	3×56	3.7	11	79.3	3×0.5	130	2.1	S4	3	E62.S19-413S40/H
3×46	116	230	3×56	2.9	8.7	88.1	3×0.65	120	2.4	S4	2.6	E62.R23-463S40/H
Rated AC voltage U_N (AC) : 1,200Vac			**U_{rms} : 850V U_S : 2,580V Test voltage (T-T) U_{TT} : 2,010Vdc Test voltage (T-C) U_{TC} : 4,800Vac**									
3×8.0	75	164	3×39	1.0	3.0	17.3	3×1.0	110	4.7	Z3	0.8	E62.M16-802Z30/H
3×25	116	164	3×56	2.4	7.2	54.0	3×0.5	130	2.5	S4	2.2	E62.R16-253S40/H
3×37.5	116	230	3×56	2.6	7.8	81.0	3×0.7	120	2.4	S4	2.6	E62.R23-373S40/H
3×41.5	116	230	3×56	2.7	5.1	89.6	3×0.55	120	2.6	S4	2.7	E62.R23-413S40/H
3×41.5	116	245	3×80	2.7	8.1	89.6	3×0.6	130	2.0	MB	2.7	E62.R24-413MB0/H
3×55.7	136	230	3×80	3.9	11.7	120.3	3×0.45	130	1.8	MB	3.4	E62.S23-563MB0/H
Rated AC voltage U_N (AC) : 1,400Vac			**U_{rms} : 1,000V U_S : 3,000V Test voltage (T-T) U_{TT} : 2,370Vac Test voltage (T-C) U_{TC} : 4,800Vac**									
3×33	136	230	3×80	3	9	97	3×0.55	120	1.8	MB	3.4	E62.S23-333MB0/H
3×40	136	280	3×80	2.9	8.7	117.6	3×0.65	140	1.5	MB	3.8	E62.S28-403MB0/H

Dimensions（E62-3HF series）

Z3/S4 terminal（Can diameter : φ60 ～ 136mm）
For one phase capacitors

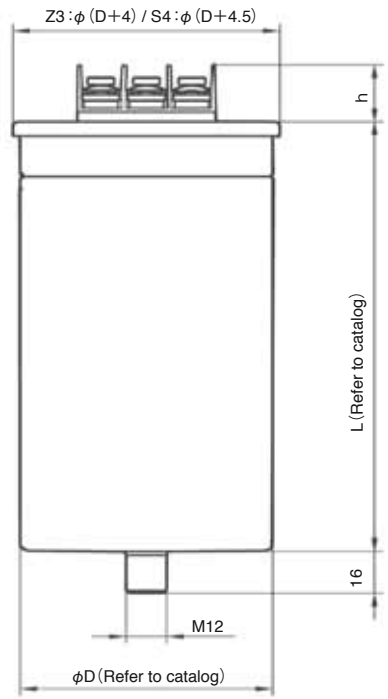

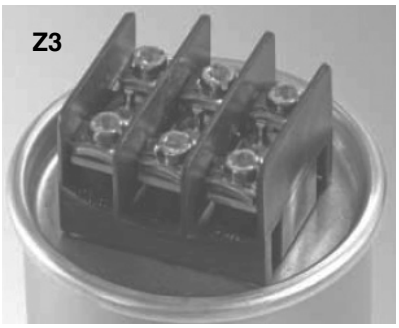

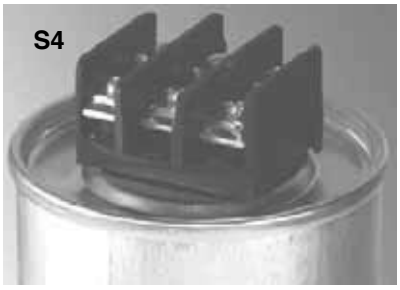

Z3

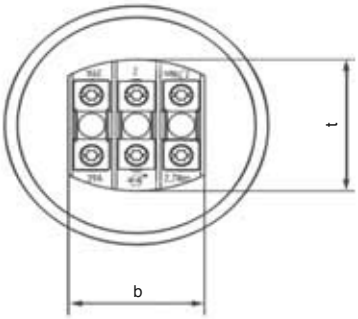

S4

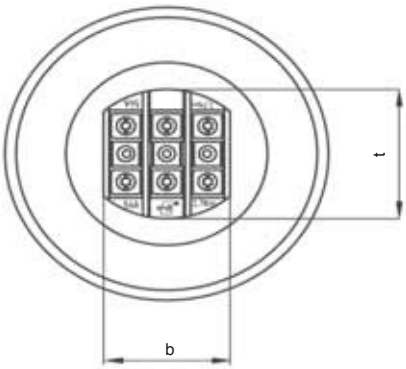

Table. Common Specification

Item		Specification
Terminal code		Z3 / S4
Can material		Aluminum
Stud bolt		M12
Lid		Aluminum
Terminal	Z3	Max wire size : max 10mm²
		Torque : 2.7Nm
		I_{max} (terminal) : 39A
		Clearance in air : 10mm
		Creepage distance : 10mm
	S4	Max wire size : max 16mm²
		Torque : 2.7Nm
		I_{max} (terminal) : 56A
		Clearance in air : 11mm
		Creepage distance : 11mm
Degree of protection		IP00
Humidity class		C

Table. Dimensions

Unit : mm

Item	Terminal	
	Z1	S2
h	22	18
b	41	47
t	43.5	53

Dimensions（E62-3HF series）

MB terminal（Can diameter : φ116 / 136mm）
For three phase capacitors

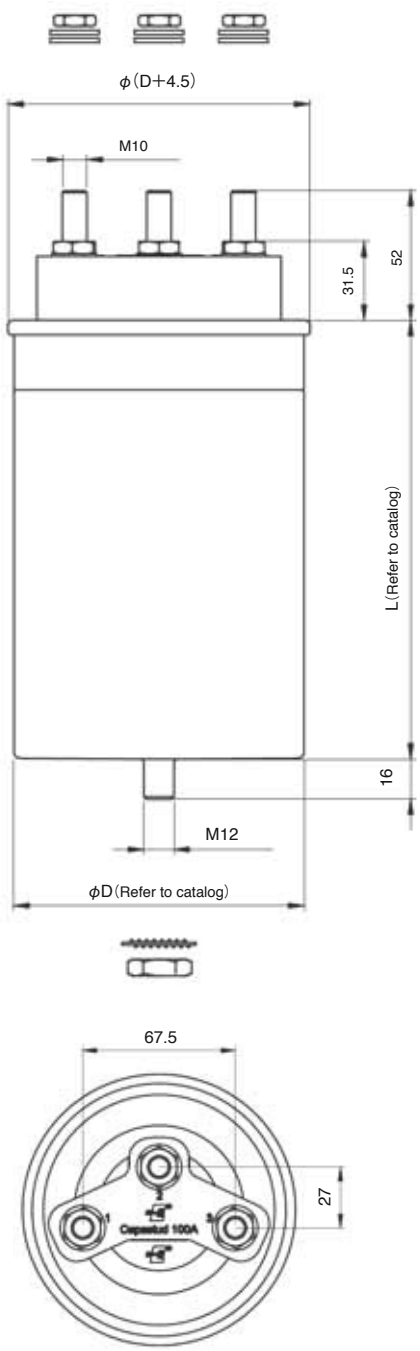

Table. Common Specification

Item	Specification
Terminal code	MB
Can material	Aluminum
Stud bolt	M12
Lid	Aluminum
Terminal	M10 bolt terminal
	Torque : 10Nm
	I_{max} (terminal) : 100A
	Clearance in air : 20mm
	Creepage distance : 25mm
Degree of protection	IP00
Humidity class	C